SWIMMING POOL EQUIPMENT

PRODUCT CATALOG 2019/2020

VALVES • DOSING SYSTEMS & SALT ELECTROLYSIS • HEAT PUMPS & DEHUMIDIFIERS • FILTERS & PUMPS • POOL CLEANING • FITTINGS
MOUNTING PARTS • LIGHTING • WATER ATTRACTIONS • OLYMPIC POOL ACCESSORIES & SPA EQUIPMENT

MIDAS-Vertriebsgebiet Deutschland nach Postleitzahlen

- *Deutschland Nordwest: Manfred Höft*
- *Deutschland Nordost: Vinzenz Pöhland*
- *Deutschland Süd: Robby Hübner*

Welcome to MIDAS.
Your satisfaction is our mission!

Dear customers,
the year 2019 will be a special year in MIDAS history!
It will be half rounded!
For 45 years, MIDAS has been among the companies that have been involved from the very beginning and have helped shape the swimming pool technology market for decades.
Today, MIDAS relies on customers from over 90 countries.
Our products are found in major cities around the world, luxury hotels, vacation destinations and private resorts. Our vision is to provide the pool world with a comprehensive and modern product range and the best possible customer service.
In the new catalog the following new product highlights are waiting for you, dear customers:

- MIDA.Sin Pro and MIDA.Sin - optimal water preparation with simple operation by means of colored Touch display via pH / redox or pH / free chlorine
- MIDA.Sin Salt - Salt electrolysis 0.2-0.4% pH / free Chlorine and algicide, with color touch display, Measurement of salinity in g / l, various controls options and Internet connection
- MIDA.Low Salt / MIDA.Salt - simple salt electric 0.1-0.2% or 0.4-0.5% with sample water section ready mounted on a wall mounting plate
- MIDA.Maxx - vertical heat pump with full Inverter technology in attractive V4A stainless steel casing
- MIDA.Force - horizontal heat pump with full Inverter technology in black ABS housing
- MIDA.Carbon Premium - GRP filter with large 400mm transparent cover and 300mm opening for comfortable filter material change and more special Silver inner coating to the formation of To reduce bacteria

- New powerful and effective bacon pumps BADU Delta with reduced power consumption
- Jet Swim Motion - Counterflow with Flat jet nozzle and dual outflow, the supports and improves swimming
- Counterflow systems and built-in parts from Hugo Lame in high-quality execution without welding stitched bronze or gunmetal
- CyclonX Pro RC4351 for prefabricated pools - One change
  The brushes are no longer necessary, because these already mounted
- Fermit Pool products - various sealing and mounting material and nonwoven adhesive
- MIDA.Slim Line Premium - Elegant Slim Line Skimmer in V4A stainless steel in revised version or as MIDA.Sline Line in ABS plastic with V4A stainless steel cover
- (Re) Cover slat covers in PVC or polycarbonat to exchange existing covers
- AdagioPro and Spectra LED's - extended range for atmospheric moments

We would like to support you, our valued customers, with a fast ordering process, on-time deliveries and a professional after-sales service, and we look forward to a sunny cooperation with you in the new season.

Best regards from the middle of Germany

Sincerely,

Your Elena Jakobson
Manager

VISIBLE AT FIRST VIEW

With an elephant labeled products are of or produced for MIDAS Pool & Fountain.

YOUR PERSONALLY CONTACT

Marco Schneider
Sales Director
marco.schneider@midas-gmbh.de
Tel. +49 (0)6659 91547-14
Mobil +49 (0)151 743 08612

Manfred Höft
Sales Manager Germany
manfred.hoeft@midas-gmbh.de
Tel. +49 (0)6659 91547-0
Mobil +49 (0)175 689 3828

Robby Hübner
Sales Manager Germany
robby.huebner@midas-gmbh.de
Tel. +49 (0)6659 91547-18
Mobil +49 (0)151 4624 8749

Vinzenz Pöhland
Sales Manager Germany
vinzenz.poehland@midas-gmbh.de
Tel. +49 (0)6659 91547-0
Mobil +49 (0)170 90 95 636

Julian Kreiß
Office Manager Germany
julian.kreiss@midas-gmbh.de
Tel. +49 (0)6659 91547-16

Dominik Klein
Office Manager Germany
dominik.klein@midas-gmbh.de
Tel. +49 (0)6659 91547-12

Jürgen Schlattner
Support/Technic
juergen.schlattner@midas-gmbh.de
Tel. +49 (0)6659 91547-22
Mobil +49 (0)151 46 71 7349

Tobias Leinweber
Support/Technic
tobias.leinweber@midas-gmbh.de
Tel. +49 (0)6659 91547-25

Kerstin Löhmer
Office Manager
info@midas-gmbh.de
Tel. +49 (0)6659 91547-0
Fax +49 (0)6659 91547-10

HOW TO FIND US

The headquarter of MIDAS is located in the industrial area of Eichenzell (Rhein-Main region) – in the heart of Germany. The proximity to the economic and financial center Frankfurt / Main and its international airport allows us to ensure the best customer service with fast, reliable and worldwide delivery.

MIDAS WORLDWIDE

From Eichenzell over Germany and Europe to the whole world. We distribute our products worldwide in over 90 countries. Wherever you are, we support you with knowledge, power and passion aside. Rely on it.

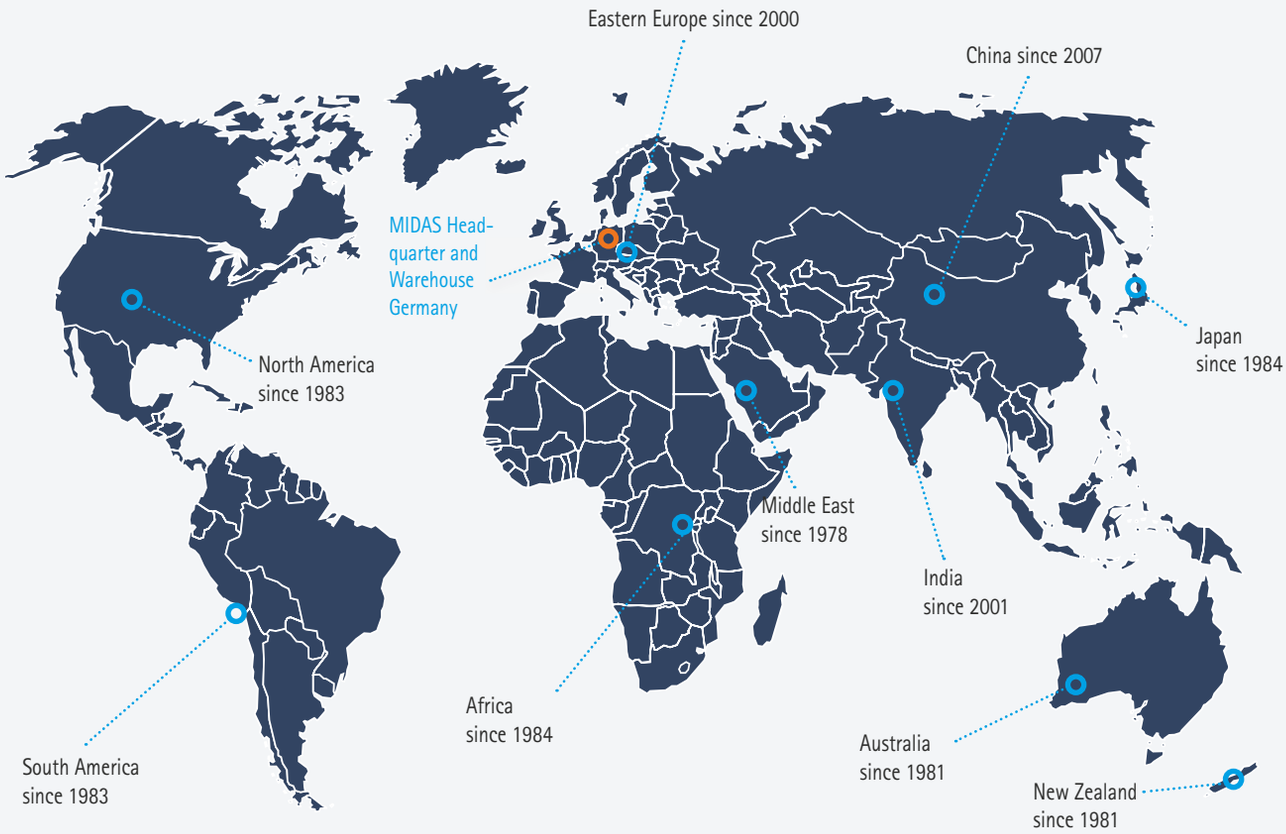

TABLE OF CONTENTS

01

Valves page 8

Automatic backwash valves

Hydraulic safety valve, automatic motorized

manual 6-way-valves – SIDE MOUNT

manual 6-way-valves – TOP MOUNT

manual multiport 6-way-valves – TOP MOUNT

manual multiport 6-way-valves – SIDE MOUNT

02

Dosing Systems & Salt Electrolysis page 20

Measure- and Dosing Systems

Salt Electrolysis & Accessories

Optional Equipment and Expansion Modules

UV-C Disinfection System

03

Water Heating & Dehumidifiers page 48

Heat Pumps

Equipment for Heat Pumps

WiFi-Adpater for Heat Pumps

Pool Dehumidifiers

Heat Exchangers

Electric Heaters

04

Filters & Pumps page72

Filter

Filter Media

Pumps

Jet Swim Units

Bronze Pumps

05

Pool Cleaning page 88

Cleaner automatic

Vac Heads

Thermometer

Wall Brushes

Leaf Skimmer

Photometer / Pool Testing

Floating Dispenser

Hoses

Tele Handles, Wintering Float & Plug

06 Fittings page 104

Rotary Disc Valves

MIDAS 2- or 3-ways Ball Valves

Check Valves

PVC-U Assortement

Flanges, Sealings

Flexible Hoses

Pipes

Glue, Cleaner, Pipe Clamps, Accessoires

07 Mounting Parts page 126

Skimmer

Wall Inlets and Floor Inlets gun metal and bronze

Floor Drains

Inlet nozzles, floor drains, built-in ABS

Swimming pool foils an Accessories

Pool cover

Ladders Stainless Steel

08 Lighting page 144

AdagioPRO and Spectra LED Lights

Underwater Lights, LED Replacement Bulbs

Wall Conduits

Face Plates

Controls for LED and Replacement Lamp

Equipment Lighting

09 Water Attractions page 156

Water Attraction Stainless Steel

Accessories Water Attractions

Air Blower

10 Spare Parts page164

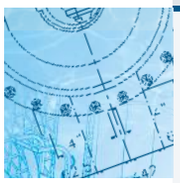

Valves

Heat Pumps

Filters

Jet Swim Units

Vacuum Heads

Rotary Disc Valve

01

FILTER-FILTERN
FILTRATION
FILTRACION
FILTRAZIONE
RINSE
NACHSPÜLEN
FILTRE-EGOUT
ENJUAGUE
RISCIACOLO
WASTE
ENTLEEREN
EGOUT
DESAGÜE
SCARICO
MIDAS
Pool Products
RECIRCULATE
ZIRKULIEREN
CIRCULATION
CIRCULACION
RICIRCOLO
CLOSED
GESCHLOSSEN
FERME
CERRADO
CHIUSO

VALVES

With valves MIDAS is familiar. Meanwhile, we look back on more than 45 years experience as a supplier and developer of valves. Whether manually or semi-automatic, Side Mount or Top Mount, in sizes from 1½ to 3 inches - MIDAS has the right valve for you.

OVERVIEW

10	MIDA.Mat Full automatic backwash valve
11	Half automatic backwash valves 1½" and 2"
11	Hydraulic safety valve, automatic motorized 6-way-valve 3" and 4"
12	Manual 6-way-valves – SIDE MOUNT 1½", 2", 2½", 3"
16	Manual 6-way-valves – TOP MOUNT 1½" and 2"
19	Manual multiport 6-way-valves – TOP MOUNT 1½" and 2"
20	Manual multiport 6-way-valves – SIDE MOUNT 1½" and 2"
21	Manual multiport 6-way-valves – SIDE MOUNT 4"

MIDA.Mat

FULL AUTOMATIC AND SIMPLY CLEVER

AUTOMATIC BACHWASH VALVE MIDA.Mat:

- ✓ innovative and trendsetting MIDAS-Development – more than 40 years valve experience included
- ✓ filtering, backwashing, afterrinsing and draining regulates the MIDA.Mat by itself
- ✓ circulation: countdown up to 3 days!
- ✓ digital filter control – up to 2 times a day
- ✓ individual programmable times for operating and backwashing the filter
- ✓ backwash: controlled by time AND pressure
- ✓ pressure setting via electronic controlled sensor – precision 0,1 bar
- ✓ battery operation in case of power cut – no emptying of the pool
- ✓ automatic stop of the pump before position change
- ✓ operation log
- ✓ error memory
- ✓ digital display
- ✓ real-time clock
- ✓ suitable for all MIDAS 1½" and 2" classic line valves (color: white or black)
- ✓ shock-resistant, splash-proofed housing (IP 65)
- ✓ regulation of several valves with one control possible
- ✓ easy to install
- ✓ the ideal technology for satisfied pool customers
- ✓ available in 85–264 VAC, 47–440 Hz
- ✓ individual special made solutions possible – we look forward to your request!
- ✓ Working pressure: 1½" valves 1,5 bar
  2" valves 2 bar

interbad 2. PREIS 2014 innovation award

✓ **MIDA.Mat**
The clever and perfect solution for each pool(-professional)!

Function	Full automatic	Half automatic
automatic filter	✓	✓
automatic backwash	✓	✓
automatic rinse	✓	✓
free programmable times	✓	–
pressure control mechanically	–	✓
pressure control electronic	✓	–
timed backwashing	✓	–
backwashing pressure controlled	✓	✓
autom. stop of the pump before position change	✓	✓
relay and timer	–	✓
circulation: countdown up to 3 days	✓	–
battery operation during power failure	✓	–
digital display	✓	–
operation log	✓	–
error memory	✓	–
real-time clock	✓	–
control of multiple valves	✓	–
invididual special made solutions possible	✓	✓

digital display

Article	Packing	Code	kg
1½" Side Mount #310-3T*, color: white	1	310-MA	4,3
1½" Side Mount #310-3TSB*, color: black	1	310-MA-1	4,3
1½" Side Mount #310-PB*, color: black	1	310-MA-2	5,8
1½" Side Mount #310-PBS*, color: black	1	310-MA-3	
2" Side Mount #320-3T*, color: white	1	320-MA	

Always install horizontally.
Backwashing and emptying required, emptying via channel button.

* Deviating valves available on request

HALF AUTOMATIC BACKWASH VALVES

- automatic rear and rinsing – adjustable backwash and rinse time (backwash: 0.5-4.0 min. rinse: 20-40 sec.)
- pressure-controlled – mechanical sensor
- optional in the cycle of 7 days
- automatic stop of the pump before position change
- relay and timer
- easy to install
- shock-resistant, splash-proofed housing (IP 65)
- available in 115/230 Volt, 50/60Hz
- working pressure: 1½" valves 1,5 bar, 2" valves 2 bar

1½" SIDE MOUNT #310-3T

2" SIDE MOUNT #320-A

Article	Packing	Code	kg
1½" Side Mount #310-3T, color: white	1	310-A	4,3
1½" Side Mount #310-3TSB, color: black	1	310-A-1	4,3
1½" Side Mount #310-PB, color: black	1	310-A-2	4,3
1½" Side Mount #310-PBS, color: black	1	310-A-3	5,8
2" Side Mount #320-3T, color: white	1	320-A	5,8

HYDRAULIC SAFETY VALVE IN THE DRAIN

Pipe connections: Ø 50 mm adhesive connection; voltage: 24 VAC; current consumption: 0.125 A; working pressure: 0.2-3 bar; flow: 0.5 m^3/h -14 m^3/h

Article	Packing	Code	kg
Hydraulic safety valve	1	303	0,5

AUTOMATIC MOTORIZED 6-WAY-VALVE

Motor assembly only time-based. ALL OPEN with 2 plugs, 24V/50/60 Hz. 4 positions: Filter, Backwash, Rinse, Drain; can be backwashed manually. Works up to 2 bars (28,5 PSI) & up to +40° C (104° F) indoor. For swimming pool application only; works only in conjunction with an electronic panel (filter, heating, etc.) to be installed on site. Price includes valve.

AUTOMATIC 3" MOTORIZED 6-WAY-VALVE

Article	Packing	Code	kg
3" Side Mount, color: white	1	SM-31-51T	15

AUTOMATIC 4" MOTORIZED 6-WAY-VALVE

Article	Packing	Code	kg
4" Side Mount, color: black	1	380-51T	26

MANUAL 6-WAY-VALVES – ABS, **SIDE MOUNT, SCREW ON TOP**

3T-Model #310-3T

1½" 6-WAY-VALVE

SIDE MOUNT - CLASSIC LINE

1½" SIDE-MOUNT valve classic generation, ABS material (cycolac) with slip or threaded connections.
all-open-type with 2 plugs
working pressure: 1,5 bar
flow rate: 9,7 m³/h at 0,4 bar
color: white or black

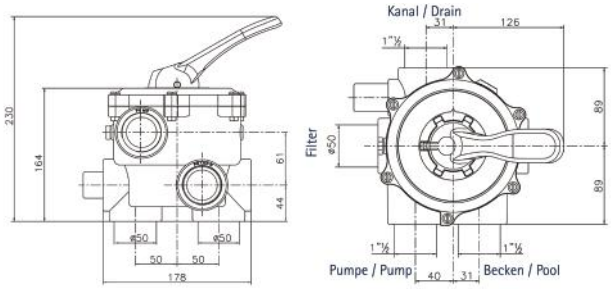

Article	Packing	Code	kg
1T-Model threaded	6	310-1T	1,83
3T-Model threaded	6	310-3T	1,83
3S-Model slip	6	310-3S	1,83
OT-Model ALL-OPEN. threaded	6	310-OT	2,00
OS-Model ALL-OPEN. slip	6	310-OS	2,00

1½" 6-WAY-VALVE-SET

INCLUSIVE PIPING* - CLASSIC LINE

1½" SIDE-MOUNT valve (#310-3TSB) with complete 50 mm tubing set (not glued), including 2 union nuts 2".
2 adhesive connections to the filter, 3 threaded connections rest
operating pressure: 1.5 bar
flow rate: 9.7 m³/h at 0.4 bar
color: black

FOR FILTER MIDA.Split 400, 500 und 600

Distance between the connections: 10,2 cm

Article	Packing	Code	kg
Valve, color: black for MIDA.Split 400, 500 and 600	6	310-PBS	1,83

FOR FILTER MIDA.Carbon 500 und 600

Distance between the connections: 12,5 cm

Article	Packing	Code	kg
Valve, color: black for MIDA.Carbon 500 and 600	6	310-PBC	1,83

* not glued

2" 6-WAY-VALVE
SIDE MOUNT - CLASSIC LINE

2" SIDE-MOUNT valve classic generation, ABS material (cycolac) with slip or threaded connections.
all-open-type with 2 plugs
working pressure: 2 bar
flow rate: 16 m³/h at 0,2 bar
color: white or black

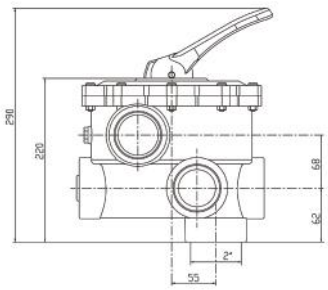

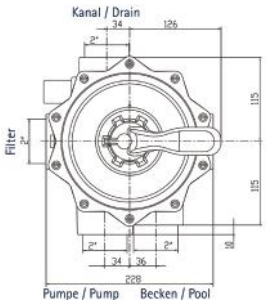

Article	Packing	Code	kg
1T-Model threaded, Color white	6	320-1T	3,17
3T-Model threaded, Color white	6	320-3T	3,17
3S-Model slip, Color white	6	320-3S	3,17
3S-Model slip, Color black	6	320-3SB	3,17
0T-Modell ALL-OPEN. threaded, Color white	6	320-0T	3,17
0S-Modell ALL-OPEN. slip, Color white	6	320-0S	3,17
2 x adhesive & 3 x thread, Color: black	6	320-3TSB	3,17

2" 6-WAY-VALVE-SET FOR MIDA.Carbon 750 and MIDA.Carbon Pro
INCLUSIVE PIPING* - CLASSIC LINE

2" SIDE-MOUNT valve (#320-3TSB) Classic generation,
ABS (Cycolac) with adhesive connections.
Distance between connections 23 cm.
operating pressure: 2 bar
flow rate: 16 m³/h at 0.2 bar, color: black

Article	Packing	Code	kg
d 63 mm glue	6	320-PBC	1,83

* not glued

2½" 6-WAY-VALVE
SIDE MOUNT - MODERN LINE

ABS fibreglass reinforced. 2½" threaded connections. Complete with piping set: piping, bulkhead fittings & o-rings. Distance between connections 27 cm.
Working pressure: 2,5 bar. Flow rate: 27 m³/h at 0,4 bar, color: black

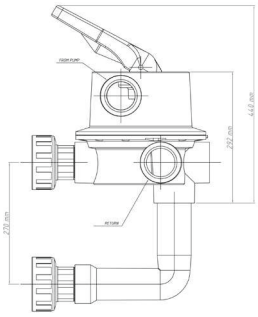

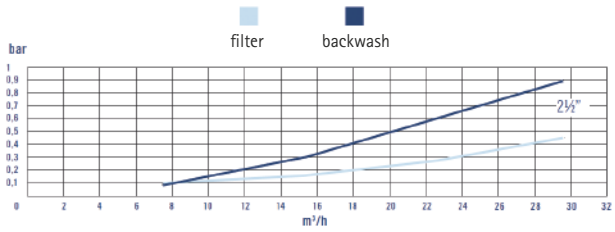

Article	Packing	Code	kg
2½" -Model threaded	1	SM-25	10,00

MANUAL 6-WAY-VALVES – FIBERGLAS REINFORCED MAX. **3,5 BAR, SIDE MOUNT, SCREW ON TOP**

1½" 6-WAY-VALVE

SIDE MOINT – FIBERGLASS REINFORCED

Fiberglass-reinforced ABS material ABS material, as "-3 threaded" model only.
Working pressure: 3,5 bar
color: black

Article	Packing	Code	kg
1½" 6-Way-Valve, Fiberglass reinforced	6	311-3T	1,83

2" 6-WAY-VALVE

SIDE MOUNT – FIBERGLASS REINFORCED

Fiberglass-reinforced ABS material. Working pressure: 3,5 bar
color: black

Article	Packing	Code	kg
2" 6-Way-Valve, Fiberglass reinforced	6	321-1T	3,33
2" 6-Way-Valve, Fiberglass reinforced	6	321-3T	3,33

3" 6-WAY-VALVE

SIDE MOUNT - MODERN LINE

ABS fiberglass-reinforced! All-Open with 2 plugs, 3" threaded connection.
Connection system with screws in stainless steel, EPDM o-rings. Designed for swimming pool application only. Working pressure: 3,5 bar, color: black

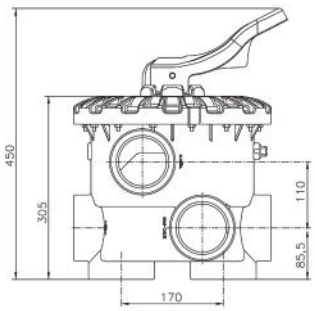

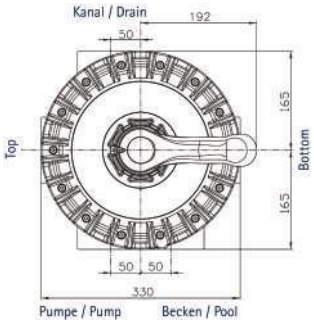

Performance diagram 3" 6-way-valves

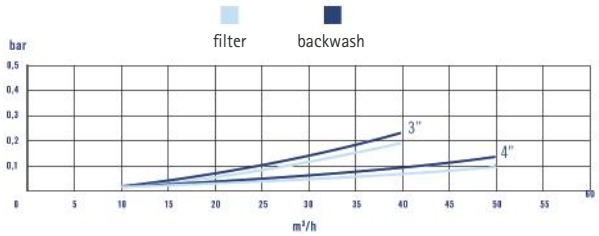

Article	Packing	Code	kg
3"- Model threaded	1	331-OT	10,00

MANUAL 6-WAY-VALVES – ABS, **SIDE MOUNT, BAYONET CATCH – EASY TO OPEN**

1½" 6-WAY-VALVE SIDE MOUNT - MODERN LINE

1½" SIDE-MOUNT High-Tech Generation, ABS material (cycolac). Bayonet-catch-type lid for quickly easy opening. With 1½" threaded connections. Model "ST" with d 50 mm slip connection to the filter, other connections 1½" threaded. Working pressure: 1,5 bar. Flow rate: 9,7 m³/h at 0,4 bar, color: white or black

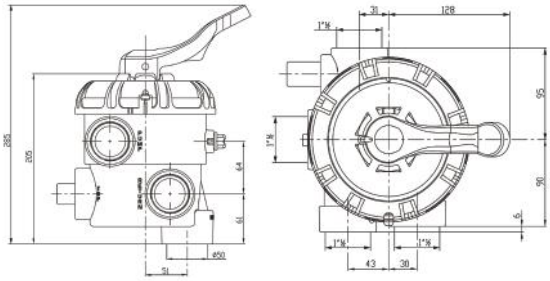

#315-WST

#315-ST

Article	Packing	Code	kg
1½" threaded; color: white	6	315-W	1,83
1½" threaded; color: black	6	315-3T	1,83
2 x slip & 3 x threaded; color: white	6	315-WST	1,83
2 x slip & 3 x threaded; color: black	6	315-ST	1,83

1½" 6-WAY-VALVE SIDE MOINT – INCL. PIPING (not glued)

1 ½" SIDE-MOUNT valve incl. piping ø 50 mm, incl. 2 bulkhead fittings 2". Distance between connections 12.5 cm. Working pressure: 1,5 bar. Flow rate: 9,7 m³/h at 0,4 bar, color: white or black

Article	Packing	Code	kg
#315-WST incl. piping ø 50 mm, white	6	315-P	2,00
#315-WST incl. piping ø 50 mm, black	6	315-PB	2,00

2" 6-WAY-VALVE SIDE MOUNT - MODERN LINE

2" SIDE-MOUNT High-Tech Generation, ABS material (cycolac). Bayonet-catch-type lid for quickly easy opening. With 2" threaded connections. Model "ST" with d 63 mm slip connection to the filter, other connections 2" threaded. Incl. key for opening. Working pressure: 2 bar. Flow rate: 16 m³/h at 0,2 bar, color: white or black

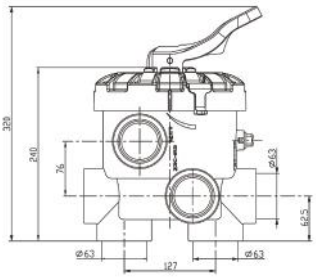

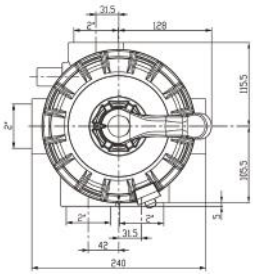

#325-WST

key for opening

Article	Packing	Code	kg
2" threaded, color: white	6	325-W	3,50
2" threaded, color: black	6	325-3T	3,50
2 x slip & 3 x threaded, color: white	6	325-WST	3,50
2 x slip & 3 x threaded, color: black	6	325-3ST	3,50

MANUAL 6-WAY-VALVES – ABS, **TOP MOUNT, SCREW ON TOP**

1½" 6-WAY-VALVE

TOP MOUNT - CLASSIC LINE

1 ½" TOP-MOUNT valve,
ABS material (cycolac),
1½" threaded connection.
Clamp set of reinforced incl.
bolts, nuts & o-ring.
clamp ø177 mm
working pressure: 1,5 bar
flow rate: 8,2 m³/h at 0,4 bar
color: white

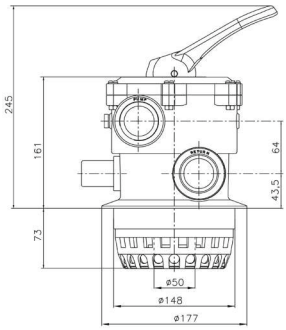

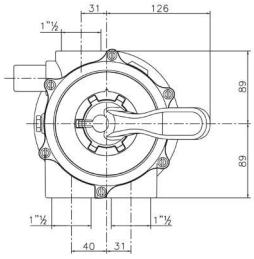

Article	Packing	Code	kg
1½" 6-Way-Valve, Top Mount	6	313-S	2,50

1½" 6-WAY-VALVE

TOP MOUNT

1½" TOP-MOUNT valve, as above, but with large clamp ø208 mm.
Working pressure: 1,5 bar. Flow rate: 8,2 m³/h at 0,4 bar, color: black

Article	Packing	Code	kg
1½" 6-Way-Valve, Top Mount	6	313-L	2,83

1½" 6-WAY-VALVE

TOP MOUNT

1½" TOP-MOUNT valve,
6" unified or buttress,
1½" threaded connection,
o-ring.
working pressure: 1,5 bar
flow rate: 8,2 m³/h at 0,4 bar
color: white

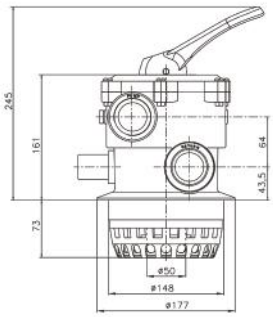

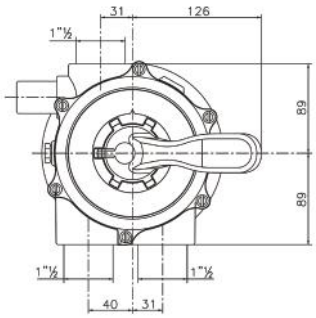

Article	Packing	Code	kg
6" unified	6	312-TU	2,17
6" buttress	6	312-TB	2,17

1½" 6-WAY-VALVE

TOP MOUNT - MODERN LINE, HOSE CONNECTION

1½ "Mini" TOP-MOUNT High-Tech Generation valve. Perfect for above-ground pools.
38 mm hose connection, clamped-on ø177 mm incl. bolts, nuts & o-ring.
Flow rate: 8,2 m³/h at 0,4 bar. Working pressure: 1,5 bar, color: black

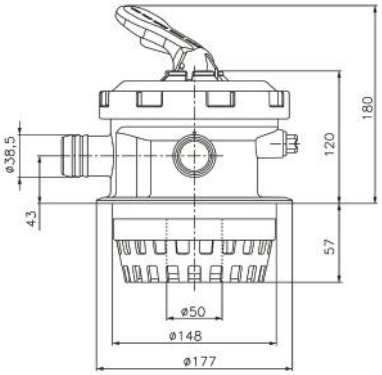

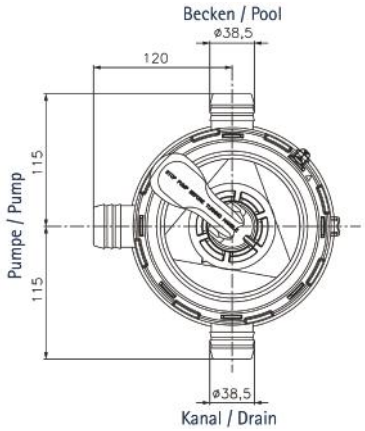

Article	Packing	Code	kg
6-Way-Valve, Mini Top Mount	6	308-S	1,70

2" 6-WAY-VALVE

TOP MOUNT - MODERN LINE

2" TOP-MOUNT-Valve, ABS (cycolac). Clamp set incl. bolts, nuts & o-ring. Clamp ø208 mm.
Working pressure: 2 bar. Flow rate: 13 m³/h at 0,2 bar, color: black

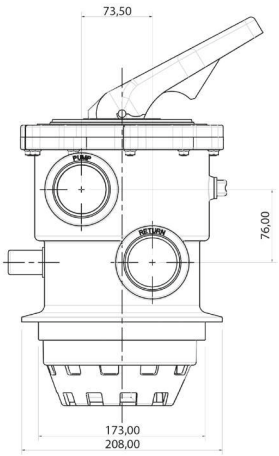

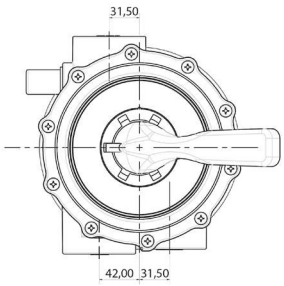

Article	Packing	Code	kg
2" 6-way-valve, Top Mount, metric	3	322-AU-MET	7,34
2" 6-way-valve, Top Mount, BSP	3	322-AU-BSP	7,34

MANUAL 6-WAY-VALVES – ABS, **TOP MOUNT, BAYONET CATCH – EASY TO OPEN**

1 1/2" 6-WAY-VALVE

TOP MOUNT - MODERN LINE, SCREW CONNECTION

1 1/2" TOP-MOUNT High-Tech Generation valve with Bayonet-catch-type lid for quickly easy opening. 1 1/2" threaded connection. Clamp set incl. bolt, nuts & o-ring. Clamp ø177 mm. Working pressure: 1,5 bar. Flow rate: 8,2 m³/h at 0,4 bar, color: black

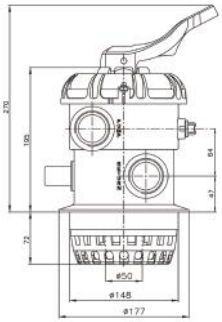

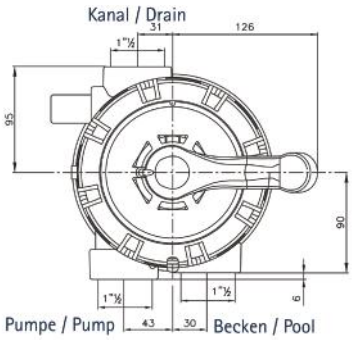

Article	Packing	Code	kg
1 1/2" 6-Way-Valve, Top Mount	6	317-S	2,17

1 1/2" 6-WAY-VALVE

TOP MOUNT

as above, but with large clamp ø208 mm. Working pressure: 1,5 bar. Flow rate: 8,2 m³/h at 0,4 bar, color: black

Article	Packing	Code	kg
1 1/2" 6-Way-Valve, Top Mount	6	317-L	2,17

2" 6-WAY-VALVE

TOP MOUNT – MODERN LINE

2" TOP-MOUNT High-Tech Generation valve with Bayonet-catch-type lid for quickly easy opening. ABS material,
incl. clamp sets incl. bolts,
nuts & o-ring. Clamp Ø 208 mm.
Working pressure: 2 bar.
Flow rate: 13 m³/h at 0,2 bar
color: black

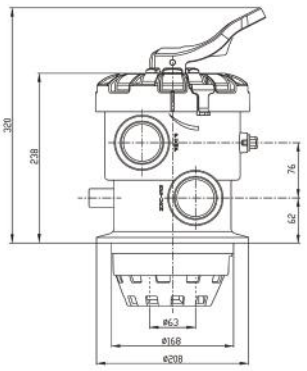

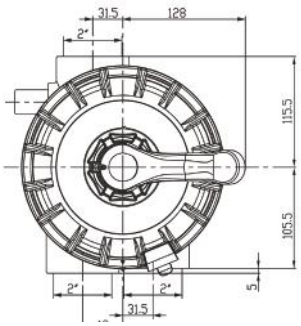

Article	Packing	Code	kg
2" 6-way-valve, Top Mount	3	327-L	3,67

MANUAL MULTIPORT 6-WAY-VALVES – ABS, **TOP MOUNT, SCREW ON TOP**

1½" MULTIPORT 6-WAY-VALVE

TOP MOUNT

ABS bolted, screw connection, clear sight glass for backwash inspection, working pressure 2,2 bar. Flow rate: 9,1 m³/h at 0,5 bar, color: white

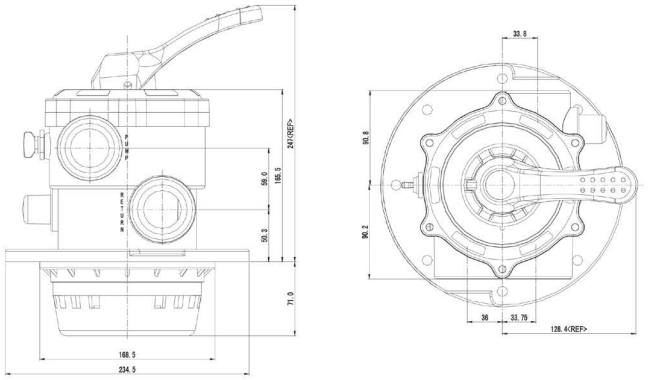

316

Pict. shows accessories

Article	Packing	Code	kg
1½" Top Mount Multiport Valve (240 x 240 x 310 mm)	1	316	2,6
Union-Set (screw nut, fitting)	1	316-E30	0,2
Manometer ¼", 0–3 bar	1	MM-E1	0,2

2" MULTIPORT 6-WAY-VALVE

TOP MOUNT

ABS bolted, screw connection, clear sight glass for backwash inspection, working pressure 2,2 bar. Flow rate: 19,6 m³/h at 0,6 bar, color: white

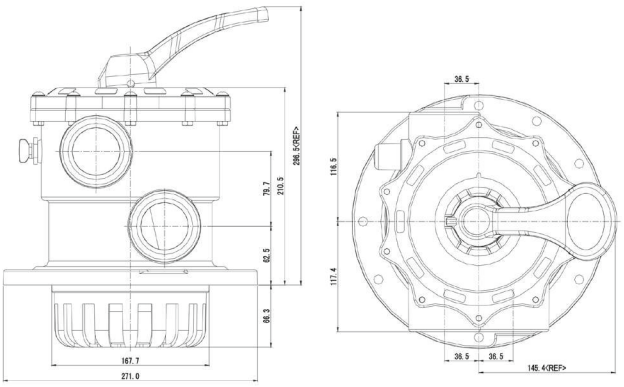

Pict. shows accessories

Article	Packing	Code	kg
2" Top Mount Multiport Valve (290 x 290 x 400 mm)	1	326	3,8
Union-Set (screw nut, fitting)	1	326-E30	0,2
Manometer ¼", 0–3 bar	1	MM-E1	0,2

MANUAL MULTIPORT 6-WAY-VALVE – MAX. OPERATING PRESSURE **5 BAR, SIDE MOUNT, SCREW ON TOP**

TECHNICAL SPECIFICATIONS:

inlet / outlet & to Vessel Top & Bottom:	1½" BSPM union ends / 2" BSPM union ends
pressure gauge & sampling points on:	¼" BSPF
re-gene rant suction tubing size:	¾" WBSPF
injector ratio:	1:1
black injector suction rate:	750 lph.
maximum Operating Pressure:	5 Kg/cm²
minimum pressure for uniform suction:	2 Kg/cm²
color:	black

1½" MULTIPORT VALVE

SIDE MOUNT - PRESSURE-SETTING PLASTIC MATERIAL

Flow rate: 10 – 12 m³/h, maximum flow: 15 m³/h

Article	Dimensions (L x W x H)	Packing	Code	kg
1½" Side Mount Multiport Valve	352 x 330 x 340 mm		318	2

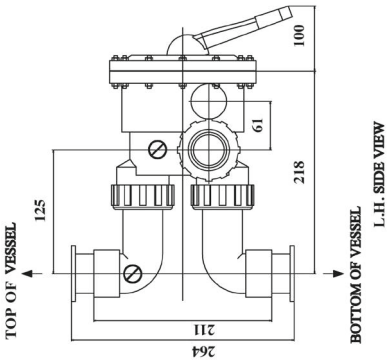

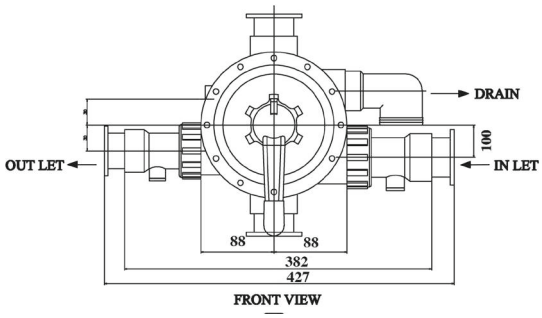

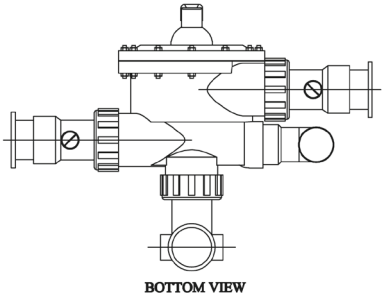

2" MULTIPORT VALVE

SIDE MOUNT - PRESSURE-SETTING PLASTIC MATERIAL

Flow rate: 20 m³/h, maximum flow: 30 m³/h

Article	Dimensions (L x W x H)	Packing	Code	kg
2" Side Mount Multiport Valve	239,5 x 229 x 263 mm		328	2,5

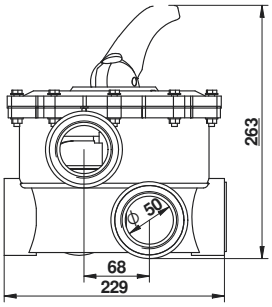

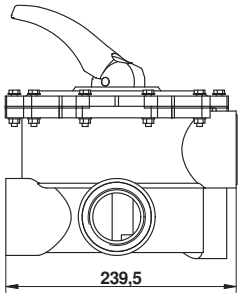

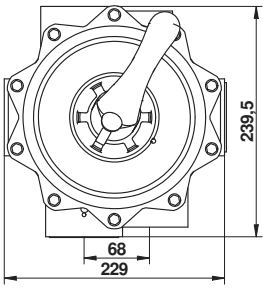

MANUAL 6-WAY-VALVE – PRESSURE-SETTING PLASTIC MATERIAL, **SIDE MOUNT, SCREW ON TOP**

4" 6-WAY-VALVE

SIDE MOUNT – MODERN LINE

Made in Germany

Pressure-setting plastic material (Poly-Urethane), complete for high requirements of public swimming pool, extremely pressure-resistant. Spider gasket as part of disc.
New position-selecting configuration, threaded connections. ALL-OPEN with 2 plugs for flexible installation. Ozone-resistant by temperature up to 40°C.
Working pressure: 3,5 bar = 49,75 PSI, Flow rate: 104 m³/h=458 GPM at 0,4 bar = 5,7 PSI, color: black

As a technical process has 4"valve decisive advantage over the conventional gate valve system:

- it is much faster & easier to install
- better overview of position selection, handling & maintenance
- less leakage possibilities than 5 gate valves
- less mistake rate of operating staff by service: closing or opening the wrong gate valve
- it offers a "RINSE" position

Working pressure:
3,5 bar = 49,75 PSI

Flow rate:
104 m³/h=458 GPM
at 0,4 bar = 5,7 PSI

Performance diagram 4" 6-way-valves

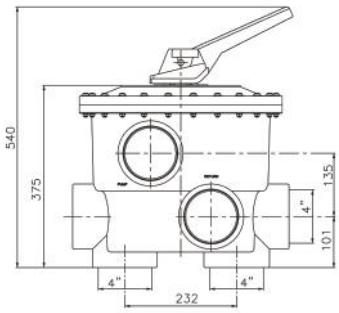

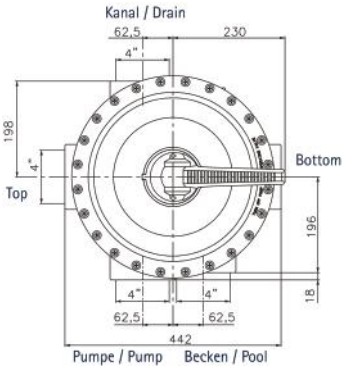

Article	Packing	Code	kg
4"-threaded	1	380-OT	18,00

ADAPTER SYSTEM

4" adaptors with o-rings built-in can be supplied optionally offering many advantages over using TEFLON tape: simpler and quicker assembly, better tightness.

Article	Packing	Code	kg
4"/110 mm "Metric"	5	380-E20	0,70

02

Chlor
0,5
pH –
7,0
15
10
27,5
164
FILTRACE
ASIN AQUA Salt

MIDAS
Pool Products
OK
MIDA.Salt

AUTOMATIC DOSING SYSTEMS & SALT ELECTROLYSIS

Hygiene and cleanliness are the nuts and bolts of a functioning pool. With us you get everything for disinfecting, disinfecting and dosing - environmentally friendly and modern. We offer measuring and control units, equipment for salt electrolysis / hydrolysis and ozone / UV-C disinfection systems, as well as all expansion modules.
Complete units for pool control and water treatment can also be found in our portfolio.

OVERVIEW

24	Measuring and control unit MIDA.Sin Pro
26	Measuring and control unit MIDA.Sin
30	Salt electrolysis MIDA.Sin Salt
33	Equipment and Expansions-Moduls MIDA.Sin Pro, MIDA.Sin, Mida.Sin Salt
36	Salt electrolysis / Hydrolysis MIDA.Low Salt
38	Salt electrolysis MIDA.Salt
40	Optional Equipment and Spare Parts for MIDA.Low Salt, MIDA.Salt
41	Pool Salt
42	Ozone- / UV-C Disinfection System

MEASURING AND CONTROL UNIT
PH-VALUE and REDOX-POTENTIAL in mV
PH-VALUE and FREE CHLORINE in mg/l

MIDA.Sin Pro

Compact measuring, control and dosing system for pH / redox or pH / free chlorine with integrated electrode holders and dosing pumps. Furthermore, algicide and a special flaking Floc + doesed for crystal clear water, 230 V, protection IP50

Art. No. 30010

NEW

intuitive Touch-screen display

2 years warranty on probes*

Controls all components:

- Filter control 230 V and frequency controlled pumps (Speck, Pentair, Hayward)
- Backwash with Besgo rod valves
- Heating control (heat pump, heat exchanger, electric heater)
- Level control (optional water level probe is required, see catalog page 34)
- Frost protection (optional air temperature thermometer required, see catalog page 34)
- Including Net: with LAN connection for remote polling of water values (no change) via browser or app or external touch display (optional). There is a safe Communication, without possible interference compared to WiFi connections.
  The app iPool Live displays the pool data in real time, error messages and the history of the values on. The web application shows real-time monitoring of water quality through visual graphics. The data is recorded for 30 days. An external 7" touch Display for wall mounting to display the water values including temperature and Humidity (optionally available, see catalog page 34)

Advantages:

- Measuring and regulating the pH value and the chlorine via the redox potential in mV or the free chlorine content in mg / l (the system can be converted later from redox to free chlorine and vice versa)
- dosage of pH or pH +
- additional dosage of Algizid and Floc + for crystal clear water, a smaller one Chlorine content and to prevent algae formation (pumps can also be deactivated or used for pH +)
- user-friendly, intuitive menu navigation via color touch display
- incl. Flow monitor with pre-filter (safety shut-off at no flow)
- Including integrated proportional control pH
- easy installation and retrofitting
- High quality dosing pumps 3.6 l / h with minimal maintenance
- high quality glass probes with 2 years warranty
- additional safety devices (dosing delay, overdose, maximum hourly dosage, too fast pH changes and maximum Doses without feedback from the probe)

Optional accessories and spare parts from catalog page 32

* Lifespan may be affected by water hardness, soiling and temperature etc.

Delivery:

- Measuring and control device
- Long Life Probes pH / Redox or pH / free chlorine
- Electric flow monitor incl. Pre-filter
- Temperature sensor incl. Immersion sleeve
- 20 m measuring and dosing line PE ¼ „/ 6x4 mm with 4 injection valves ¼"
- 2 ball valves ¼ „/ 6x4 mm
- 7 PVC reductions 50 mm x ¼ „IG
- 4 suction feet for container removal
- Screws and dowels for wall mounting
- Pooltester pH / chlorine free
- Instructions with accessories

Art. No. 30011

View App: *

View Browser: **

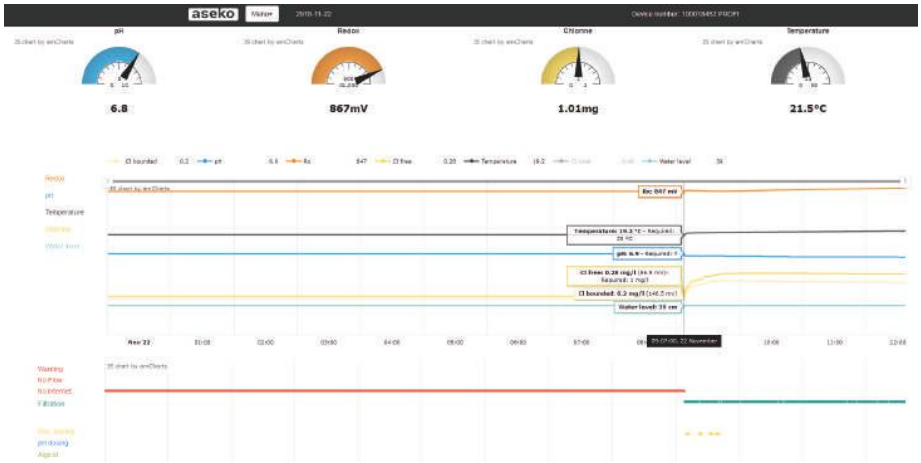

* control of the containers level are calculated (no level measurement), Accuracy +/- 10%

** Saves the data 30 days, exporting the data as csv file are possible

Technical specifications	MIDA.Sin Pro
Display	colored 7 "touch display, 4 languages (D, GB, RUS, CZ)
Power	230 V / 50 Hz
Rate of consumption	24 VA
Dimensions	430 x 330 x 160 mm
Casing	stainless steel V2A / AISI 304
Communication	LAN / RS485
Output control	potential-free relay, max. 1A, max. 230V (Besgo, magnetic valv, refilling, heating relay)
Input	4-20 mA sensor input
Power consumption with filter pump	1.449 VA
Pump connection	max. 1,4 kW / 230 V
Circulation pump connection	max. 230 V / 1 A, potential-free relay
Fuse	T800 mA, T160 mA, T6,3 A
Protection class	II
Protection	IP30
Operating temperatur	+5°C bis +40°C
Install	wall mounting
Dosing pump performance	60 ml / min., max. 1 bar
Max. Pool volume	250 m³
Measuring water pressure	max. 1 bar
Weight	6,7 kg

Article	Code
MIDA.Sin Pro pH / Redox NET	30010
MIDA.Sin Pro pH / Chlor NET	30011

MEASURING AND CONTROL UNIT
PH-VALUE and REDOX-POTENTIAL in mV
PH-VALUE and FREE CHLORINE in mg/l

MIDA.Sin

Compact measuring, control and dosing system for pH / ORP or pH / free chlorine with integrated electrode holders and dosing pumps, 230 V, protection class IP50

NEW

intuitive Touch-screen display

2 years warranty on probes*

Art. No. 30015 + 30016

Advantages:

- Measuring and regulating the pH value and the chlorine via the redox potential in mV or the free chlorine content in mg / l
  (the system can be converted later from redox to free chlorine and vice versa)
- dosage of pH or pH +
- user-friendly, intuitive menu navigation via color touch display
- including flow monitor with pre-filter (safety shutdown at no flow)
- Including integrated proportional control pH
- easy installation and retrofitting
- High quality dosing pumps 3.6 l / h with minimal maintenance
- high quality glass probes with 2 years warranty
- additional safety devices (dosing time delay, overdose, max hourly dosage, too fast pH changes and maximum dosages without Feedback of the probe)
- **Optional NET:** with LAN connection for remote polling of water values (no change) via browser or app. Secure communication, without possible interference in comparison to WiFi connections. The app iPool Live shows the pool data in real time, error messages tions and the history of the values.
  The web application shows real-time water quality monitoring clear graphics. The data is recorded for 30 days. An external 7"
  Touch display for wall mounting to display the water values including temperature and Humidity (optionally available, see catalog page 34)

Optional accessories and spare parts from catalog page 32

* Lifespan may be affected by water hardness, soiling and temperature etc.

Delivery:

- Measuring and control device
- Long Life Probes pH / Redox or pH / free chlorine
- Electric flow monitor incl. Pre-filter
- Temperature sensor incl. Immersion sleeve
- 15 m measuring and dosing line PE ¼ „/ 6x4 mm with 4 injection valves ¼"
- 2 ball valves ¼ „/ 6x4 mm
- 4 PVC reducers 50 mm x ¼ „IG
- 2 suction feet for container removal
- Screws and dowels for wall mounting
- Pooltester pH / chlorine free
- Instructions with accessories

Art. No. 30017 + 30018

View App: *

View Browser: **

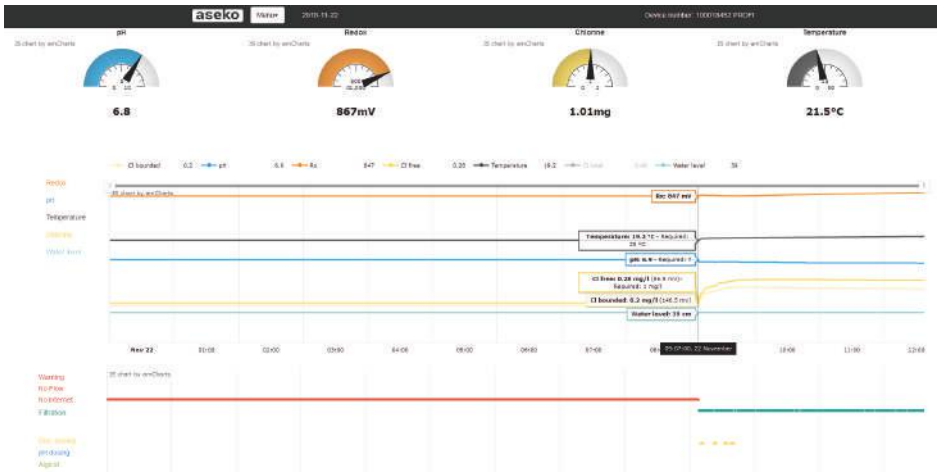

* control of the containers level are calculated (no level measurement), Accuracy +/- 10%

** Saves the data 30 days, exporting the data as csv file are possible

Technical specifications	MIDA.Sin
Display	colored 7 "touch display, 4 languages (D, GB, RUS, CZ)
Power	230 V / 50 Hz
Rate of consumption	14 VA
Dimensions	290 x 240 x 115 mm
Casing	ABS plastic
Communication	LAN optional
Fuse	T80 mA
Protection class	II
Protection	IP50
operating temperatur	+5°C bis +40°C
Install	wall mounting
Dosing pump performance	60 ml / min., max. 1 bar
Max. Pool volume	250 m³
Measuring water pressure	max. 1 bar
Weight	2,2kg

Article	Code
MIDA.Sin pH / Redox	30015
MIDA.Sin pH / Redox NET	30016
MIDA.Sin pH / Chlor	30017
MIDA.Sin pH / Chlor NET	30018

SALT ELECTROLYSIS

The automatic water treatment by salt electrolysis is becoming increasingly popular compared to the proven liquid chlorine dosage.

ADVANTAGES

- Skin-friendly, softer swimming pool water (no eye redness or skin irritation)
- Salt is a natural product, no smell of chlorine, storage and transport without conditions
- No storage of liquid chlorine (sodium hypochlorite) in containers
- Low operating costs through automatic reprocessing of the salt as well as low acquisition costs compared to liquid chlorine
- Longer absence (eg vacation) is possible without hesitation (no empty chlorine container is possible)
- Easy to use
- Safe disinfection even at high temperatures
- A retrofit into existing pool facilities is easily possible

FUNCTIONALITY

Salt is split by the electrolysis cell, fresh sodium hypochlorite is produced and a sufficient amount of free chlorine is ensured. The salt is added to the pool manually in the required amount (1,5 – 5,0 g/l = 0,15 – 0,50 %) - see details depending on the model). In the pool, this results in a slightly salty water, contrary to the sea water with approx. 3.5 % salinity.

VARIANTS

- Salt electrolysis with hydrolysis work with approx. 1.5 g / l or salt electrolysis with 4.0 - 5.0 g / l
- Without pH / ORP control> Production volume of chlorine is set manually and must be checked regularly
- With pH control> Chlorine production is controlled manually, whereby the pH value is automatically measured and regulated
- With pH / ORP control> pH value and chlorine production is automatically measured and regulated via the ORP potential
- Other accessories (free chlorine measurement, salt measurement, WIFI, grounding, sacrificial anode, etc.) are optionally available

DIMENSIONING

In addition to pool size, water temperature is an important factor in choosing the model you need.
The number of bathers and the dirt entry or climatic conditions should of course be taken into account.
Choose a model with higher chlorine production to ensure the required amount of chlorine.

PLEASE NOTE:

The use of V4A stainless steel in conjunction with this type of disinfection is not recommended due to possible corrosion. However, corrosion can be avoided if an optional sacrificial anode (see page 35) is installed, the components are grounded and the chloride content does not exceed 600 mg / l. It is possible that slight rusting occurs on the diaphragm surface. These should be polished at least once a year.
A guarantee is not accepted.
We generally advise against using AISI 304 stainless steel.
We recommend plastic or bronze components as well as titanium instead of stainless steel heat exchangers.

HYDROLYSIS

The hydrolysis (splitting of salt in oxygen and hydrogen) generates highly effective oxygen compounds with a perfect disinfection effect. To ensure a sanitary water condition even when the filter pump is not running, the salt electrolysis produces a small amount of chlorine.
This combination requires a minimum quantity of chlorine because of a very low salt content (1,5 g/l) compared to normal salt electrolysis (3-5 g/l).

MIDA.Sin Salt

Compact salt electrolysis system (2-4 g / l salinity) for pH / free chlorine measurement / algicide and pool management system with integrated electrode holders and dosing pumps, 230 V, protection class IP30

Art. Nr. 30020

NEW

intuitive Touch-screen display

2 years warranty on probes*

Controls all components:

- Filter control 230 V
- frequency controlled pumps (bacon, pentair, hayward) see article no. 30020VS
- Backwash with Besgo rod valves
- Heating control (heat pump, heat exchanger, electric heater)
- Level control (optional water level probe is required, see catalog page 34)
- Frost protection (optional air temperature thermometer required, see catalog page 34)
- **Including Net:** with LAN connection for remote polling of water values (no change) via browser or app or external touch display (optional). There is a safe Communication, without possible interference compared to WiFi connections. The app iPool Live displays the pool data in real time, error messages and the history of the values on. The web application shows real-time monitoring of water quality through visual graphics. The data is recorded for 30 days. An external 7 „touch Display for wall mounting to display the water values including temperature and Humidity (optionally available, see catalog page 34).

Advantages:

- Exact measurement of the free chlorine content in mg / l (system can be converted later to redox)
- dosage of pH or pH +
- additional dosage of algicide, for a lower chlorine content and for the algae prevent the pump (can also be deactivated or used for pH +)
- including flow monitor with pre-filter (safety shutdown at no flow)
- incl. Measurement of salinity in g / l
- incl. Temperature measurement
- Self-cleaning cell for 2-4 g of salt per liter (2% - 4% salinity) with approx. 8,000 operating hours, vertical or horizontal installation
- user-friendly, intuitive menu navigation via color touch display
- easy installation and retrofitting
- High quality dosing pumps 3.6 l / h with minimal maintenance
- high quality glass probes with 2 years warranty

Optional accessories and spare parts from catalog page 32

* Lifespan may be affected by water hardness, soiling and temperature etc.

Delivery:

- Salt electrolyzer with electrolytic cell
- Long Life Probes pH / Free Chlorine
- Conductivity probe for measuring the Salinity in g / l
- Electric flow monitor incl. Pre-filter
- Temperature sensor incl. Immersion sleeve
- 15 m measuring and dosing line PE ¼ „/ 6x4 mm with 2 injection valves ¼ „
- 2 ball valves ¼ „/ 6x4 mm
- 5 PVC reductions 50 mm x ¼ „IG
- 2 suction feet for container removal
- Screws and dowels for wall mounting
- Pooltester pH / chlorine free
- Instructions with accessories

Nine coupled MIDA.Salt, regulated with MIDA.Salt profile

View Browser:**

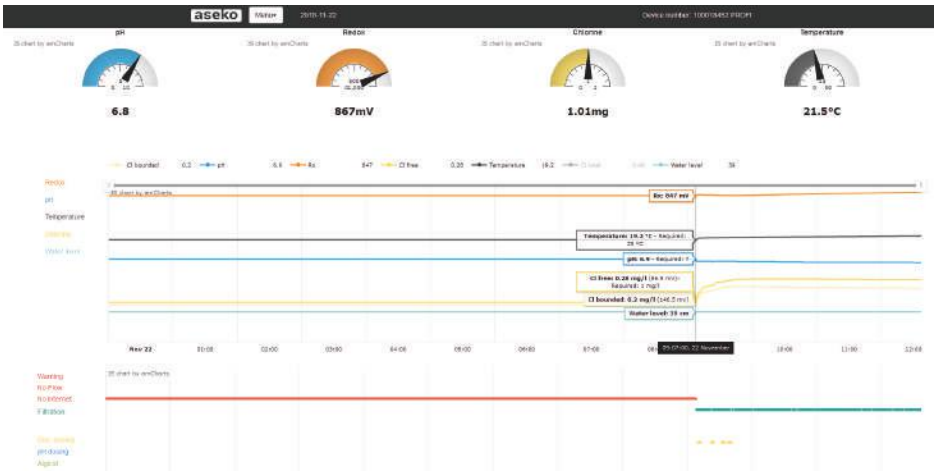

View App:*

* control of the containers level are calculated (no level measurement), Accuracy +/- 10%

** Saves the data 30 days, exporting the data as csv file are possible

Technical specifications	MIDA.Sin Salt
Display	colored 7 "touch display, 4 languages (D, GB, RUS, CZ)
Power	230 V / 50 Hz
Rate of consumption	190 VA
Dimensions	450 x 330 x 190 mm
Casing	stainless steel V2A (304)
Communication	LAN / RS 485
Output control	potential-free relay, max. 1A, max. 230 V (Besgo, magnetic valve, heating relay)
Input	4-20 mA sensor input
Chlorine production at 4% salinity	20 g/h
Operating hours of the electrolysis cell	8.000 hours
Power consumption with filter pump	1.840 VA
Pump connection	max. 1,4 kW / 230 V
Circulation pump connection	max. 230 V / 1 A, potential-free relay
Fuse	T800 mA, T125 mA, T6,3 A
Protection class	II
Protection	IP30
operating temperatur	+5°C bis +40°C
Install	wall mounting
Dosing pump performance	60 ml / min., max. 1,5 bar
Max. Pool volume	75 m³
Measuring water pressure	max. 1,5 bar
Weight	10 kg
Needed salt	9 bags of 25 kg each

Article	Code
MIDA.Sin Salt pH / Chlor NET	30020
MIDA.Sin Salt pH / Chlor NET VS for speed-controlled pump	30020VS

* for larger and / or extremely loaded pools up to max. 150 m³ or higher temperatures, an additional MIDA.Sin Salt Easy (see catalog page 35) must be used

OPTIONAL ACCESSORIES AND SPARE PARTS FOR MIDA.Sin Pro, MIDA.Sin AND MIDA.Sin Salt

NEW

Art.No. C0001

Art.No. C0002

Art.No. C0003

Art.No. C0004

Art.No. C0005

Art.No. C0006

WATER CARE LIQUID

Article	Content	Weight	Classification	Art.Nr.
MIDA.Sin Chlor Pure 13%	20 l	24 kg	ADR 8 / UN 1791	C0001
MIDA.Sin pH Minus 19%	20 l	24 kg	ADR 8 / UN 2796	C0002
MIDA.Sin pH Plus 5%	20 l	24 kg	ADR 8 / UN 1824	C0003
MIDA.Sin Algizid 10%	20 l	24 kg	ADR 9 / UN 3082	C0004
MIDA.Sin Floc+*	20 l	24 kg	ADR 8 / UN 3264	C0005
MIDA.Sin Oxy Pure 11,9%	20 l	24 kg	ADR 5.1 / UN 2984	C0006

* Mixture of coagulant and flocculant

OPTIONAL ACCESSORIES AND SPARE PARTS FOR MIDA.Sin Pro, MIDA.Sin AND MIDA.Sin Salt

pH probe Long Life

NEW

Quality glass probe

2 years warranty on probes *

Article	Code
pH-probe Long Life	30010-E1

Redox probe Long Life

NEW

Quality glass probe

2 years warranty on probes *

Article	Code
Redox-probe Long Life	30010-E2

Chlorine probe Long Life

NEW

Titanium, silver and stainless steel diaphragm probe for direct measurement of free chlorine content

2 years warranty on probes *

Article	Code
Chlorine probe Long Life	30010-E3

Injection valve ¼ "

NEW

For injection of water care products, resistant to acids, alkalis and chlorine

Article	Code
Injection valve ¼ "	30010-E4

PE Measuring water and Dosing line ¼ "x 6.35 mm

NEW

For connecting the measuring water, the water treatment agent with the dosing pumps and the seed valves, resistant to acids, lyes and chlorine.
Price per 1m length (please specify desired length)

Article	Code
PE Measuring water and Dosing line ¼ "x 6.35 mm	30010-E5

Dosing Pump

NEW

High performance pump with 3.6 l / h power, up to 1 bar pressure. Item No. 30010-E6 doses 7.2 l / h at 24 V supply. The design and construction ensure a long service life and constant performance. For dosing disinfectants, flocculants and pH-corrections, for pools up to 250 m³

Article	Code
Dosing pump 12-24V	30010-E6
Metering hose pump 230V	30010-E7

* Lifespan may be affected by water hardness, soiling and temperature etc.

Replacement Dosing Pump

NEW

3.6 l / h for MIDA.Sin Pro, MIDA.Sin and MIDA.Sin Salt

Article	Code
Replacement Dosing Pump 12V	30010-E9

Dosing pump hose

NEW

Replacement dosing pump hose from Pharmed, resistant to acids and chemicals, Including throw and silicone grease

Article	Code
Dosing pump hose	30010-E8

External touchscreen display 7"

NEW

For remote access with display of water values, incl. air temperature and humidity sensor, dimensions: 253 x 168 x 39 mm, incl. dowels and screws

Article	Code
External touchscreen display	30010-E10

Thermometer air temperature

NEW

If you need frost protection, without cable, electronic temperature sensor with 4-20 mA output

Article	Code
Thermometer air temperature	30010-E11

Pressure Water level probe

NEW

This hydrostatic water level gauge is compact with strain gauges in installed stainless steel housing. 4 measurements: Pump off, make-up on, Make-up from, backwashing on.
The measuring range is factory-set between 5 - 200 cm, but can be up to 100 cm be adjusted. Cable length: 4.0 m

Article	Code
Pressure level sensor	30010-E12

MIDA.Sin Pool

NEW

Intelligent control for the whole Swimming pool technology, which can be easily queried and controlled by smartphone (no change of water parameters).

With the following functions: filter, backwash (Besgo), heating, solar, level, overflow control, cover / lighting

Article	Code
MIDA.Sin Pool	30010-E13

MIDA.Sin Pool VS

NEW

Intelligent control for the whole
Swimming pool technology, which can be easily queried and controlled by smartphone (no change of water parameters). With the following functions: filter, backwash (Besgo), heating, solar, level, overflow control, cover / lighting,
additionally: with control 4-20 mA for frequency controlled pumps (Speck, Pentair, Hayward)

Article	Code
MIDA.Sin Pool VS	30010-E14

MIDA.Sin Pool VS + Box

NEW

Article No. 30010-E14 practical and protected installed in the control box, degree of protection IP50

Article	Code
MIDA.Sin Pool VS Box	30010-E15

Zeta Potential Mixer – ZPM

NEW

The ZPM is a static mixer for cavitation of the water and for injection from Floc + flocculant. It reinforces the coagulation and flocculation effect for the conversion of the dissolved particles into filterable substances.
Material: Stainless steel V4A / AISI316 with plastic fittings

Article	Length	Code
Connection: d50 / DN40	195 mm	30010-E16
Connection: d63 / DN50	245 mm	30010-E17

Electrolysis cell

NEW

Titanium with iridium-ruthenium Coating, chlorine production of 22 g / h at 0.4% salinity, approx. 8,000 operating hours

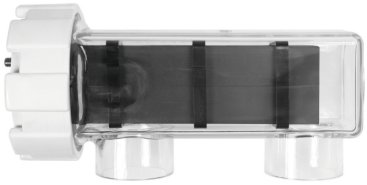

Article	Code	
Electrolysis cell	30020-E1	595,80 €

Sacrificial anode

NEW

1½ „sacrificial anode for corrosion protection of built-in parts, especially in salt electrolysis,
Material: zinc, in 50 mm or 63 mm PVC, T-piece

Article	Code
Sacrificial anode 50 mm	0A-50
Sacrificial anode 63 mm	0A-63
Sacrificial anode 1½"	0A

MIDA.Sin Salt Easy

NEW

Extension for MIDA.Sin Salt, for larger and / or extremely congested pools or higher temperatures, to double the chlorine production 22 g / h (at 0.4% salinity)

Article	Code
MIDA.Sin Salt Easy	30020-E2

MIDA.Low Salt

Compact salt electrolysis for private pools with low salt content of 1-2 g / l = 0.1-0.2%, shockproof housing with stainless steel frame V4A / AISI 316 and digital display with menu navigation in 12 different languages (DE, GB, F, NL, CZ, E, CAT, P, I, HR, HEB, TR), 230V, protection class IP65

NEW

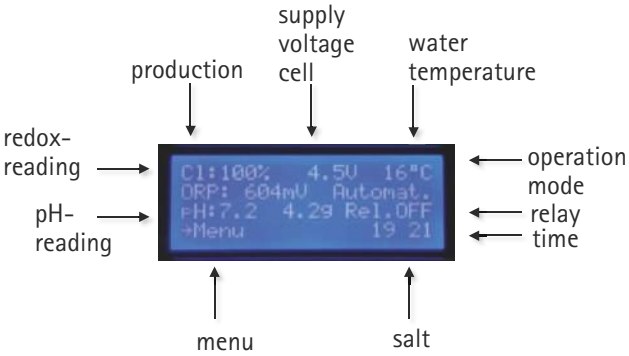

Characteristics:

- works with 1 - 2 g of salt per liter
- integrated microprocessor
- pH / Redox / Chlorine Options with high-quality PVC probes easy to install and maintainable wall mounting plate with 1.5 l / h pH dosing pump
- coaxial cable with BNC connector
- probes are interchangeable
- integrated gas sensor, optional flow switch for horizontal installation
- incl. filter control and a free relay for lighting etc.
- reduction of chlorine production when the pool cover is closed
- dosing time delay
- easy and intuitive menu navigation (3 buttons) in 12 different languages, see catalog page 40

Advantages:

- Self-cleaning monopolar (MIDA.Low Salt 1 and 2) or bipolar cells (MIDA.Low Salt 3) with 10,000 hours operating life at 4 hours polarization and 18,000 hours at 8 hours polarization, vertical installation (horizontal with flow switch see page 40)
- waterproof housing with IP65 protection
- very easy to install because of the large clamping area
- less power consumption and less heat in the device, since no transformers are installed (less susceptible to interference)
- easy to retrofit into almost any pool area
- can be upgraded with any option, see catalog page 40)

Recommended chlorine production by pool size and filter usage

filtration times	Pool volume 25 m³	50 m³	75 m³	100 m³	125 m³	150 m³	175 m³	200 m³
4 h	15 g/h	25 g/h						
6 h	10 g/h	20 g/h	25 g/h	35 g/h				
8 h	10 g/h	15 g/h	20 g/h	25 g/h	35 g/h	35 g/h		
10 h			15 g/h	20 g/h	25 g/h	35 g/h	35 g/h	
12 h				20 g/h	25 g/h	25 g/h	35 g/h	35 g/h

At >28 °C please use the next larger system

Prerequisite of the water parameters

Parameter	Minimal	Maximal	Check
Hardness [ppm]	150	250	monthly
Alkalinity [ppm]	100	160	weekly
pH	7,0	7,8	weekly
Cyanuric acid	0	50	monthly

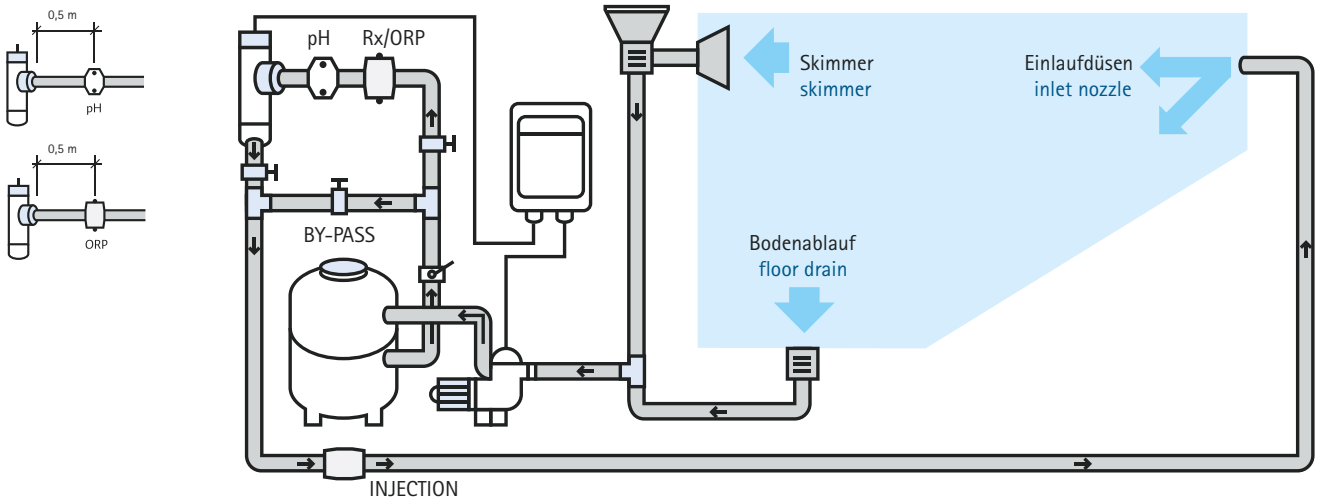

Description	MIDA.Low Salt 1	MIDA.Low Salt 2	MIDA.Low Salt 3
Use		private pools	
Intensity		0-100 %	
Mininmal salt concentration		1 g per liter	
Recommended salt concentration		1-2 g per liter	
Production chlorine with 4 – 5 g salt	15 g/h	20 g/h	30 g/h
m³ Pool (up to 28°C)*	50 m³	75 m³	125 m³
m³ Pool (up to 28°C)*	25 m³	50 m³	100 m³
Display		LCD digital 20 x 4 cm, 12 languages (DE, GB, F, NL, CZ, E, CAT, P, I, HR, HEB, TR)	
Power supply		230 V 50/60 Hz	
Outlet (cell)	25 A	35 A	17,55 A
Maximum power output	187,5 W	363 W	380 W
Max. voltage cell	7,5 V (monopolar)	7,5 V (monopolar)	21 V (bipolar)
Dimensions		308 x 250 x 89 mm	
Electronic box		fireproof plastic ABS, black	
Protection class		IP 65	
Electronic		microprozessor 16 bit	
Intensity control		Ampere + Volt	
Ventilation		natural convection	
Automatic cleaning		programmable 1-8 h	
Flow switch		gas sensor	
Time counter		yes	
Control production of disinfection		0 - 100 %	
Alarms		salt insufficient / too much salt / no flow / error pH pump / fault probe / short circuit / temperature	
Test salinity		too much / too little salt without conductance probe or in g / l with conductance probe	
Production control by pool cover		20% production with closed pool cover	
Production control by external signal		–	
Communication		RS 232	
230 V output control (1 output)		acid pump	
Potential-free output control (1 output)		AUX 1	
Number of bags of salt	2 - 4 backs à 25 kg	3 -6 backs à 25 kg	5 - 10 backs à 25 kg

* at least 8 hours filter runtime (with several users per day or less filter running time, the required chlorine production should be coordinated together).

Article	Max. pool volume	Code
MIDA.Low Salt 1	50 m³	1031
MIDA.Low Salt 2	75 m³	1032
MIDA.Low Salt 3	125 m³	1033

Other systems available on request

MIDA.Salt

Compact salt electrolysis for private swimming pools with impact-resistant housing with stainless steel frame V4A / AISI 316 and digital display with menu navigation in 12 different languages (DE, GB, F, NL, CZ, E, CAT, P, I, HR, HEB, TR), 230V , Protection class IP65

NEW

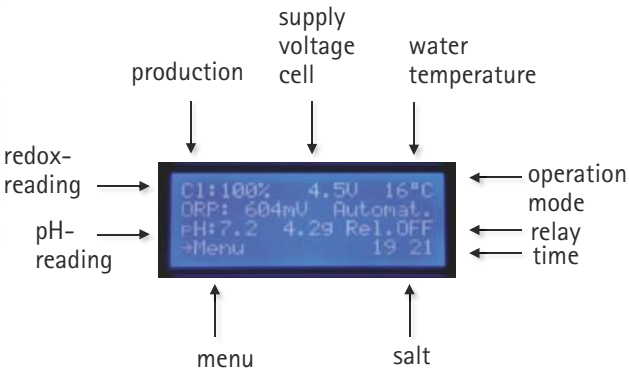

Characteristics:

- works with 4 - 5 g salt per liter
- integrated microprocessor
- pH / ORP / Chlorine Options with high-quality PVC probes easy to install and maintainablewall mounting plate with 1.5 l / h pH dosing pump
- coaxial cable with BNC connector
- probes are interchangeable
- integrated gas sensor, optional flow switch for horizontal installation
- incl. filter control and a free relay for lighting etc.
- reduction of chlorine production when the pool cover is closed
- dosing time delay
- easy and intuitive menu navigation (3 buttons) in 12 different languages, see catalog page 40

Advantages:

- self-cleaning monopolar cells with 10,000 operating hours lifetime at 4 hours polarization and 18,000 hours at 8 hours polarization, vertical installation (horizontal with flow switch see page 40)
- waterproof housing with IP 65 protection
- very easy to install because of the large clamping area
- less power consumption and less heat in the device, since no transformers are installed (less susceptible to interference)
- easy to retrofit in almost any pool area
- can be upgraded with any option, see catalog page 40

Recommended chlorine production by pool size and filter usage

		Pool volume							
		25 m³	50 m³	75 m³	100 m³	125 m³	150 m³	175 m³	200 m³
filtration times	4 h	15 g/h	25 g/h						
	6 h	10 g/h	20 g/h	25 g/h	35 g/h				
	8 h	10 g/h	15 g/h	20 g/h	25 g/h	35 g/h	35 g/h		
	10 h			15 g/h	20 g/h	25 g/h	35 g/h	35 g/h	
	12 h				20 g/h	25 g/h	25 g/h	35 g/h	35 g/h

At >28 °C please use the next larger system

Prerequisite of the water parameters

Parameter	Minimal	Maximal	Check
Hardness [ppm]	150	250	monthly
Alkalinity [ppm]	100	160	weekly
pH	7,0	7,8	weekly
Cyanuric acid	0	50	monthly

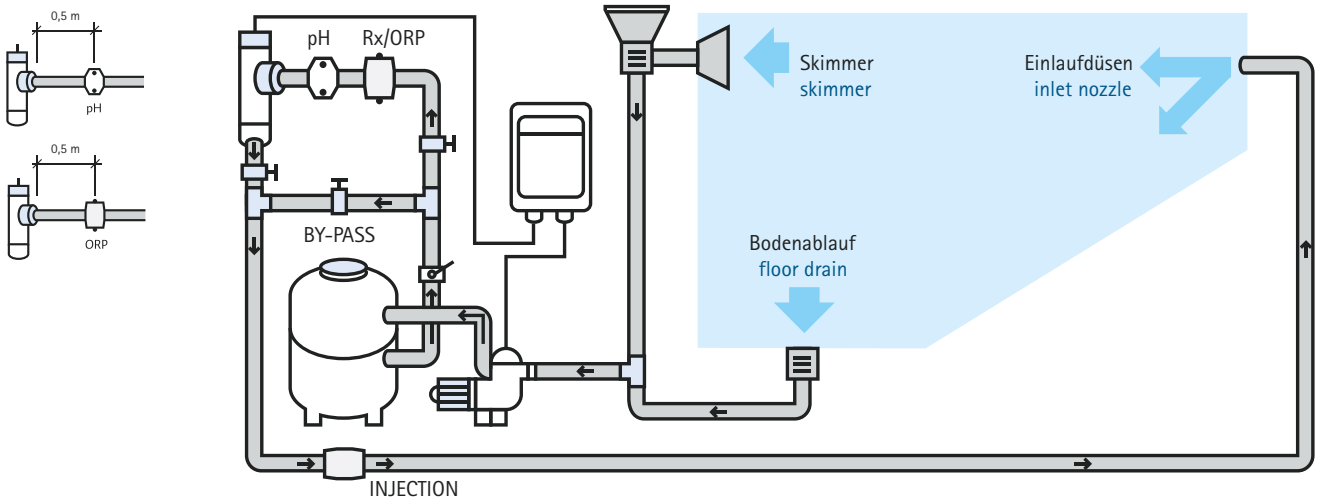

Description	MIDA.Salt 1	MIDA.Salt 2	MIDA.Salt 3
Use		private pools	
Intensity		0-100 %	
Mininmal salt concentration		2 g per liter	
Recommended salt concentration		4–5 g per liter	
Production chlorine with 4 – 5 g salt	15 g/h	25 g/h	35 g/h
m³ Pool (up to 28°C)*	50 m³	100 m³	150 m³
m³ Pool (up to 28°C)*	25 m³	50 m³	100 m³
Display		LCD digital 20 x 4 cm, 12 languages (DE, GB, F, NL, CZ, E, CAT, P, I, HR, HEB, TR)	
Power supply		230 V 50/60 Hz	
Outlet (cell)	15 A	25 A	35 A
Maximum consuption	112,5 W	187,5 W	263 W
Max. voltage cell		7,5 V (monopolar)	
Dimensions		308 x 250 x 89 mm	
Electronic box		fireproof plastic ABS, black	
Protection class		IP 65	
Electronic		microprozessor 16 bit	
Intensity control		Ampere + Volt	
Ventilation		natural convection	
Automatic cleaning		programmable 1-8 h	
Flow switch		gas sensor	
Time counter		yes	
Control production of disinfection		0 - 100 %	
Alarms		salt insufficient / too much salt / no flow / error pH pump / fault probe / short circuit / temperature	
Test salinity		too much / too little salt without conductance probe or in g / l with conductance probe	
Production control by pool cover		20% production with closed pool cover	
Production control by external signal		–	
Communication		RS 232	
230 V output control (1 output)		acid pump	
Potential-free output control (1 output)		AUX 1 (e.g., circulating pump)	
Number of bags of salt	8 - 10 backs à 25 kg	16- 20 backs à 25 kg	24 -30 backs à 25 kg

* at least 8 hours filter runtime (with several users per day or less filter running time, the required chlorine production should be coordinated together).

Article	Max. pool volume	Code
MIDA.Salt 1	50 m³	1021
MIDA.Salt 2	100 m³	1022
MIDA.Salt 3	150 m³	1023

Other systems available on request

OPTIONAL EQUIPMENT AND SPARE PARTS FOR MIDA.Low Salt AND MIDA.Salt

NEW

Optional equipment

1017

1018

Article	kg	Code
pH / ORP Module Pro wall mounting plate with sample water tank, prefilter and dosing pump	2,5	1017
pH / free chlorine module Pro wall mounting plate with sample water tank, pre-filter and dosing pump	0,5	1018
pH module for PVC pipe Installation incl. dosing hose pump		1019
Earthing	1	1012
NTC temperature module	0,5	1013
Flow switch	0,1	1014
Conductivity module for measurement of salinity in g/l	0,5	1015

Art.-Nr. 1012

Art.-Nr. 1019

Art.-Nr 1015

Art.-Nr. 1013

Art.-Nr. 1014

Spare parts

Art.-Nr. 1021-E1

Art.-Nr. 1021-E4

Art.-Nr. 1021-E2 und
Art.-Nr. 1021-E3

Art.-Nr. 1021-E5

Article	kg	Code
MIDA.Low Salt cell15 g/h	5	1031-E1
MIDA.Low Salt cell 20 g/h	5	1032-E1
MIDA.Low Salt cell 30 g/h	5	1033-E1
MIDA.Salt cell 15 g/h	5	1021-E1
MIDA.Salt cell25 g/h	5	1022-E1
MIDA.Saltcell 35 g/h	5	1023-E1
MIDA.Salt pH probe	5	1021-E2
MIDA.Salt Redox gold probe	5	1021-E3
MIDA.Salt free chlorine probe	5	1021-E4
MIDA.Salt pH peristaltic pump 1,5 l/h	5	1021-E5
MIDA.Salt pH peristaltic pump 1,5 – 4 l/h	5	1021-E6

POOL SALT

Corresponding to EN 16401 and BPR 528/2012 EU.
Pool salt contributes to a safer use of the swimming pool for swimming and offers high comfort. Poolsel is made on the basis of natural, coarse sea salt with an extremely high purity and low sulfate content and contains no harmful Release agent. The pool salt will be used for optimizing the salinity and for the production of chlorine by electrolysis.

Application: salt for swimming pools / salt electrolysis (not suitable for membrane electrolysis), sea salt for optimizing salinity

Features:
- salt crystals – grain size: 1–2 mm
- very high purity - contains no additives
- good and fast soluble
- suitable for all work of electrochlorinators

Package contents: 25 kg, only be purchased in full pallets

Article	Code	kg	Packing
Poolsalt	799	25,0	40 (per pallet)

CLEAN WATER WITH UV-C DISINFECTION

Already in 1878 it was discovered that sunlight has an antibacterial effect. Further investigation revealed that the germicidal effect does not run out from the visible light, but the invisible ultraviolet light in the wavelength range of 200-280 nanometers (nm). A popular accessory possibility of swimming pool water treatment is therefore the UV-C radiation without influencing the water quality (pH, oxygen content). The addition of water care products can thus be considerably reduced.
The UV-C disinfection systems are integrated in the filter circuit of the swimming pool. The UV-C light destroys the cells and DNA from bacteria, viruses and microorganisms. This environmentally friendly and effective method often totally destroys the organism, or at the very least will impair its ability to reproduce.

UV-C is effective against all microorganisms | Crystal clear water | Reduced use of chemicals for water treatment | Lower costs for chemicals, energy and maintenance | No overdosing risk | UV-C is an environmentally friendly technology

WHAT IS AOP?

The AOP process (Advanced Oxidation Process) combines the advantages of ozone and UV-C in one device. The combined use of ozone and UV-C light in water generates hydroxyl radicals (OH-). These radicals are a very effective remedy for chlorine-resistant microorganisms (like legionella bacteria and cryptosporidium), organic pollutants and by-products of cleaning such as chloramines, which are responsible for eye and skin irritation and the typical smell of chlorine.
Since UV-C light destroys the residual ozone in the water, no de-ozonization device is required.
AOP is a very effective and efficient method for the disinfection and disinfection of your pool. Therefore, the amount of chlorine in the pool can be kept to a minimum.

The advantages of AOP:

- Highly effective combination of ozone (oxidation) and UV-C (disinfection)
- Improves the disinfection efficiency
- Enables minimal chlorine content in the pool
- Effective against chlorine-resistant microorganisms
- Prevents the appearance of skin and eye irritation
- Can be quickly integrated into existing filter systems

AOP COMPACT OZON & UV-C
AOP COMPACT OZON & UV-C SALTWATER

2 years manufacturer's warranty
except lamp and quartz glass

This revolutionary combination of ozone and UV-C (AOP) makes a pool with a minimal amount of chlorine possible! With this AOP Compact Ozone & UV-C unit on your pool system you´re able to keep your pool water fresh, crystal clear and especially hygienic clean. This device is able to reduce the chlorine concentration up to 50 - 80 %! You connect the AOP Compact Ozone & UV-C" in to your swimming pool system. Using a pump, the water is pumped after the filter into the unit through the supplied reactor. Because of the water pressure in the reactor, air is sucked through the Venturi system. Air is sucked into the unit via the air valve and flows through the area between the quartz glass and the AOP Compact Ozone & UV-C lamp. The lamp has a double function, producing ozone and UV-C light at the same time. Because air enters the unit via the lamp, ozone is generated by the special AOP Compact Ozone & UV-C lamp, which produces 0.6 grams of ozone. After it has passed the ball valve, the ozone enriched air is then mixed with water in the system. The oxidation and sterilisation take place here, and a powerful disinfection process is achieved. When ozone is used in combination with UV-C light in water, hydroxyl radicals (OH-) are created. These radicals are very effective against chlorine immune microorganisms (like Legionella bacteria and Cryptosporidium), organic pollutants and cleaning byproducts such as chloramines, responsible for eye and skin irritation and the typical chlorine smell.

Advantages:

- the combination of ozone and UV-C (AOP), integrated in this smart designed purifier, ensures fresh and healthy pool water with the possibility of using a minimum of chlorine.
- a built-in electronic ballast to ensure a smooth power supply
- 100 % effective and constant operation against chlorine-resistant microorganisms
- the ozone UV-C lamp produces ozone for 4.500 hours and produces UV-C for 9.000 hours
- the device will indicate when the lamp needs replacing
- easy installation and maintenance
- prevents occurrence of skin and eye irritation

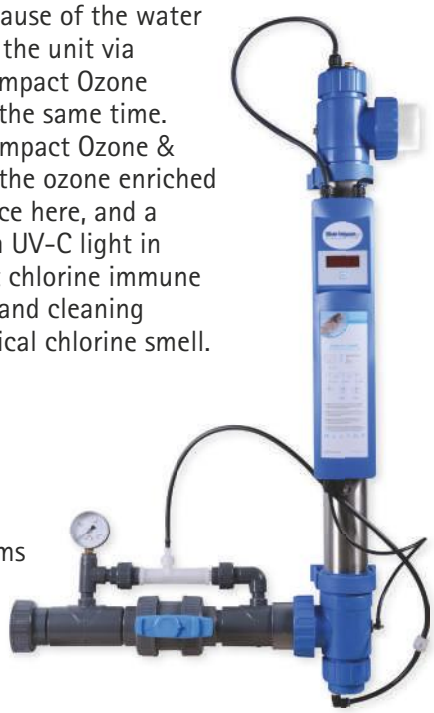

#208 – AOP Compact Ozon & UV-C Housing Stainless Steel AISI 316 L
Up to 35 % more UV-C yield as a result of reflection

	AOP Compact Ozon & UV-C 75 W	AOP Compact Ozon & UV-C Saltwater 75 W
Max. pool content	70 m³	70 m³
Type	75.000/75W	75.000/75W
Rec. flow rate	18 m³/h	18 m³/h
Max. pressure	2 Bar	2 Bar
Max. flow	23 m³/h	23 m³/h
Water temperature	10 – 40 °C	10 – 40 °C
Diameter unit Ø	70 mm	70 mm
Length unit	100 cm	100 cm
Diameter in-outlet Ø	63 mm / 50 mm / 1½"	63 mm / 50 mm / 1½"
Housing	Stainless Steel AISI 316 L	PVC
Electronic ballast	230 V AC 50/60 Hz	230 V AC 50/60 Hz
Maximum current	0,57 A	0,57 A
Lamp wattage	75 W	75 W
Lamp	T5 75 W Ozone	T5 75 W Ozone
Lifetime of lamp	4.500 h Ozone 9.000 h UV-C	4.500 h Ozone 9.000 h UV-C
Ozone production	0,6 g/h	0,6 g/h
Timer	yes	yes
Replace lamp alarm	yes	yes
Weight	6,0 kg	6,0 kg
Packing size	37 x 13 x 111 cm	37 x 13 x 111 cm
Code	208	209

#209 – AOP Compact Ozon & UV-C Saltwater – housing PVC for saltwater pools

REPLACEMENT LAMP 75 WATT OZONE

Article	kg	Code
Replacement lamp 75 Watt Ozone	0,3	208-E1

EASY UV (4-8 m³/h)

UV-C DISINFECTION TECHNOLOGY

TYPE EASY-UV

The Easy-UV devices are bacteriologically tested. If the installation instruction is followed closely, a disinfection degree between 75% and 91% can be reached. On the second day the 94% mark will already be obtained. Easy-UV devices disinfect the water through UV-C light and destroy chloramines.
Bacteria, viruses, microalgae, fungi, parasites and other microorganisms will be destroyed. The unpleasant odor and the irritation of the mucus membranes in the nose, eyes, skin, and throat caused by the chloramines is absent. The water remains fresh, clean and clear and keeps its natural taste. Healthy minerals are not lost.
Easy-UV devices save chemicals. You will save up to 50% on chemical treatments and the aging of the building materials in and around the swimming pool slows down considerably.
UV-C disinfection is compatible with all other forms of water treatment.
Through the filter pump the device is easily connected to the water circuit.

Technical Information	4-8 m³/h	5-15 m³/h
Max. pool content	40 m³	20–75 m³
Lamp	1x low pressure lamp	1x low pressure lamp
Max. service lifetime of lamp	9000 h	9000 h
Power consumption	75 W	75 W
Wavelenght	253,7 nm	253,7 nm
Itensity at 1 m	245 µW/cm²	245 µW/cm²
Dwell time	4 - 2 Sek.	6,7 – 2,25 Sek.
Voltage	230 V	230 V
Frequency	50 Hz	50 Hz
IP - Code	IP 54	IP 54
Ballast	electronic	electronic
Fkow rate	4 - 8 m³/h	5 - 15 m³/h
Bypass operation up to	15 m³/h pumps	30 m³/h pumps
Max. pressure	2,5 bar	2,5 bar
Casing: electropolished	AISI 316 / 1.4404	AISI 316 / 1.4404
Water temperature	10 - 40 °C	10 - 40 °C
Time counter	no	yes
On/off switch	no	yes
Control lamp	yes	yes

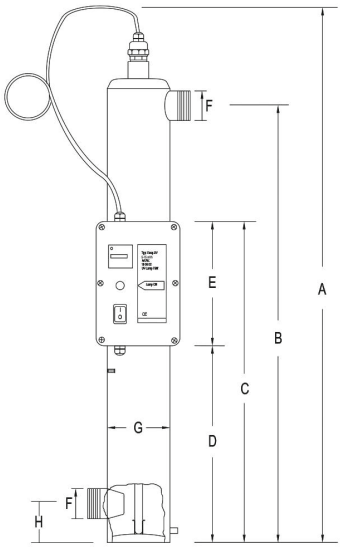

Type	A	B	C	D	E	F	G	H
Easy-UV 4–8 m3/h	1000 mm	790 mm	650 mm	400 mm	240 mm	1½" AG	90 mm	60 mm
Easy-UV 5–15 m3/h	1000 mm	805 mm	650 mm	400 mm	240 mm	2" AG	125 mm	80 mm

Max. pool content	Flow rate	Max. flow in the bypass	External thread	Code	kg
40 m³	4-8 m³/h	15 m³/h	1,5"	129	12,0
20-75 m³	5-15 m³/h	30 m³/h	2,0"	207	12,0

optionally available on base plate

EASY UV (5-15 m³/h)

REPLACEMENT-UV-LAMP

Article	Watt	Code	kg
Replacement-Lamp (#129 and #207)	80	129-E1	0,2

OPTIONAL EQUIPMENT (not included in delivery)

Article	Code
Floor flange for #129 and #207	129-E2
Pair plastic clamps for #129	129-E4
Pair plastic clamps for #207	207-E1

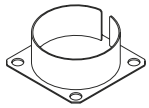

Floor flange

Plastic clamps

UV-C TECH DISINFECTION SYSTEMS

with timer

Plug-in device timer with LED display and operating hours counter

- housing stainless steel AISI316 / connection ABS
- 2 x 63/50 mm slip connection, alternatively 2 x 1½" internal thread
- 230 V

2 years manufacturer's warranty
except lamp and quartz glass

	40 Watt	75 Watt	130 Watt
Max. pool content	45 m³	75 m³	90 m³
Lamp	1x low pressure lamp PHILIPS TUV 36T5 4P-SE 40W	1x low pressure lamp PHILIPS TUV 36T5 HO 4P-SE 75W	1x low pressure lamp PHILIPS TUV 130W 48-SE Amalgam
Max. service life of lamp	9.000 h	9.000 h	16.000 h
Power consumption	40 W	75 W	130 W
Wavelenght	253,7 nm	253,7 nm	253,7 nm
Voltage	230 V AC 50/60 Hz	230 V AC 50/60 Hz	230 V AC 50/60 Hz
Current consumption	0,29 A	0,57 A	1,1 A
Material: housing	stainless steel 316L	stainless steel 316L	stainless steel 316L
Max. pressure	2 bar	2 bar	2 bar
Water temperature	10 - 40 °C	10 - 40 °C	10 - 40 °C
Recommended flow	11 m³/h	16 m³/h	22 m³/h
Max. pool size	45 m³	65 m³	90 m³
Time counter	yes	yes	yes
Diameter	70 mm	70 mm	70 mm
Length	1000 mm	1000 mm	1000 mm

#205, 206, 128

Max. pool content	Watt	Length (cm)	Code	kg
45 m³	40	100	205	4,1
75 m³	75	100	206	4,3
90 m³	130	100	128	6,0

REPLACEMENT-UV-LAMP

Article	Watt	Code	kg
Replacement-Lamp Philips	40	205-E1	0,5
Replacement-Lamp Philips	75	206-E1	0,5
Replacement-Lamp Philips	130	128-E1	0,5

UV-C TECH DISINFECTION SYSTEMS

- housing stainless steel 316 / connections PVC
- 2 x 63/50 mm slip connection, alternatively 2 x 1½" internal thread
- 230 V

2 years manufacturer's warranty
except lamp and quartz glass

	12 Watt	16 Watt	40 Watt	75 Watt	130 Watt
Max. pool content	12 m³ (Whirpool)	20 m³	45 m³	65 m³	90 m³
Lamp	1x low pressure lamp PHILIPS PLS 12W	1x low pressure lamp T5 16W 4P	1x low pressure lamp T5 40W 4P	1x low pressure lamp T5 75W 4P	1x low pressure lamp PHILIPS 130W Amalgam
Max. service life of lamp	9.000 h	9.000 h	9.000 h	9.000 h	16.000 h
Power consumption	12 W	16 W	40 W	75 W	130 W
Wavelenght	253,7 nm	253,7 nm	253,7 nm	253,7 nm	253,7 nm
Voltage	230 V AC 50/60 Hz	230 V AC 50/60 Hz	230 V AC 50/60 Hz	230 V AC 50/60 Hz	230 V AC 50/60 Hz
Current consumption	0,25 A	0,29 A	0,29 A	0,57 A	1,1 A
Material: housing	stainless steel 316L	stainless steel 316L	stainless steel 316L	stainless steel 316L	stainless steel 316L
Max. pressure	2 bar	2 bar	2 bar	2 bar	2 bar
Water temperature	10 - 40 °C	10 - 40 °C	10 - 40 °C	10 - 40 °C	10 - 40 °C
Recommended flow	3 m³/h	5 m³/h	11 m³/h	16 m³/h	22 m³/h
Max. pool size	12 m³	20 m³	45 m³	65 m³	90 m³
Time counter	no	no	no	no	no
Diameter	70 mm	70 mm	70 mm	70 mm	70 mm
Length	420 mm	560 mm	1000 mm	1000 mm	1000 mm

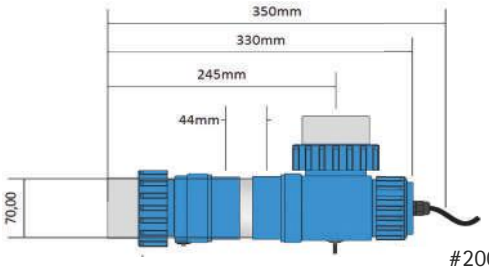

#200

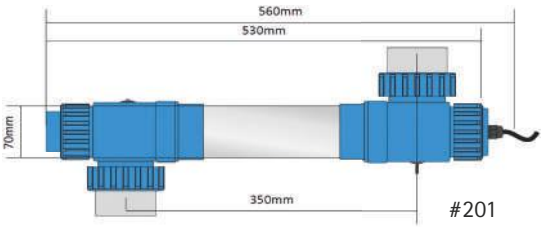

#201

#202, 203, 204

Max. pool content	Watt	Length (cm)	Code	kg
12 m³ (Whirlpool)	12	40,5	200	1,6
20 m³	16	56	201	2,8
45 m³	40	100	202	3,6
65 m³	75	100	203	3,9
90 m³	130	100	204	

REPLACEMENT-UV-LAMP

Article	Watt	Code	kg
Replacement-Lamp T5	16	201-E1	0,5
Replacement-Lamp T5	40	202-E1	0,5
Replacement-Lamp T5	75	203-E1	0,5
Replacement-Lamp Philips	130	204-E1	0,5

- housing PVC / connections PVC
- UV-resistant coated
- suitable for saltwater)*
- 2 x 63/50 mm slip connection, alternatively 2 x 1½" internal thread
- 230 V

2 years manufacturer's warranty
except lamp and quartz glass

	202B	203B
Max. pool content	45 m³	65 m³
Lamp	1x low pressure lamp PHILIPS SMART CAP 40W	1x low pressure lamp PHILIPS SMART CAP 75W
Max. service life of lamp	9.000 h	9.000 h
Power consumption	40 W	75 W
Wavelenght	253,7 nm	253,7 nm
Voltage	230 V AC 50/60 Hz	230 V AC 50/60 Hz
Current consumption	0,42 A	0,8 A
Material: housing	PVC (UV-C stable)	PVC (UV-C stable)
Max. pressure	2 bar	2 bar
Water temperature	10 - 40 °C	10 - 40 °C
Recommended flow	9 m³/h	14 m³/h
Max. pool size	45 m³	65 m³
Time counter	no	no
Diameter	70 mm	70 mm
Length	1000 mm	1000 mm

#202B, 203B

Max. pool content	Watt	Length (cm)	Code	kg
45 m³	40	100	202B	3,0
65 m³	75	100	203B	3,2

REPLACEMENT-UV-LAMP

Article	Watt	Code	kg
Replacement-Lamp T5	40	202-E1	0,5
Replacement-Lamp T5	75	203-E1	0,5

* max. salt concentration: 35 g/l

UV-C Pro HDPE

The UV-C Pro HDPE is designed to treat highly polluted water. It is suited for all kinds of industrial water purification and can even be used for the production of ultrapure water, semiconductor-, pharmaceutical- and cosmetic industry. Other applications: swimming pools, process water treatment and aquaculture.
Use in sea water: yes

2 years manufacturer's warranty
except lamp and quartz glass

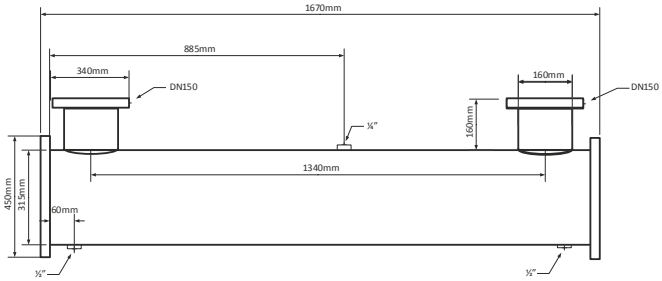

UV-C Pro HPDE 975 W

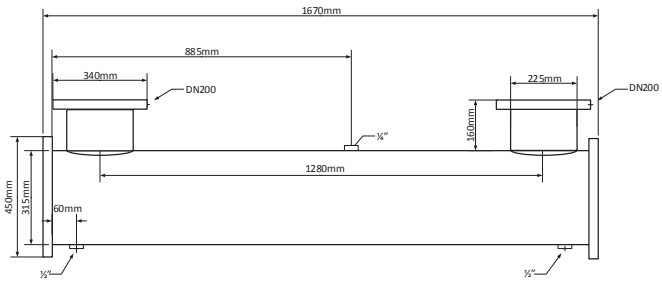

UV-C Pro HPDE 1950 W

Description	UV-C Pro HPDE 975 W	UV-C Pro HPDE 1950 W
Recommended pool size	600 m^3	1000 m^3
Lamp	T6 325W 4P Amalgam	T6 325W 4P Amalgam
Max. service life of lamp	16.000 h	16.000 h
UV-C lamp power	3x 325 Watt	6 x 325 Watt
Wavelenght	254 nm	254 nm
Voltage	230 V AC 50/60 Hz	230 V AC 50/60 Hz
Current consumption	5.4 A	10.7 A
Material housing	HDPE	HDPE
Protection class	IP54	IP54
Max. pressure	6 bar (87 psi)	6 bar (87 psi)
Water temperature	0 - 55 °C	0 - 55 °C
Hour meter	yes	yes
Reactor diameter	Ø 315 mm	Ø 315 mm
Reactor length	1670 mm	1670 mm
Reactor shape	U	U
Connection mm	160 mm flange	225 mm flange
Connection DN	DN150 flange	DN200 flange
Recommended flow at 30 mJ/cm^2 (98 % transmission)	n/a	n/a
Recommended flow at 40 mJ/cm^2 (98 % transmission)	n/a	n/a
Recommended flow at 60 mJ/cm^2 (98 % transmission)	115 m^3/h	218 m^3/h
Max. flow	150 m^3/h	250 m^3/h
Weight	165 kg	165 kg
Code	**130**	**131**

UV-C Pro stainless steel

Multi-lamp unit (2 x 200 W or 3 x 200 W) for commercial applications in professional industry. Safe and continuous water disinfection without use of chemicals. Suitable for providing safe water without harmful micro-organisms in all sectors where perfect disinfection is needed. In combination with Basic or Control Monitor Plus. UV-C sensor optional. Easy installing and maintenance. Lamp replacement without tools.
Use in sea water: no

2 years manufacturer's warranty
except lamp and quartz glass

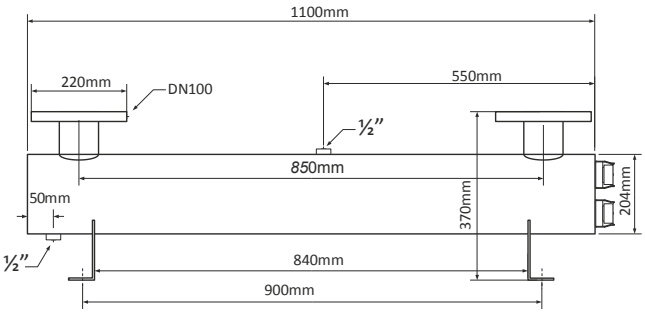

UV-C Pro Inox 400 W

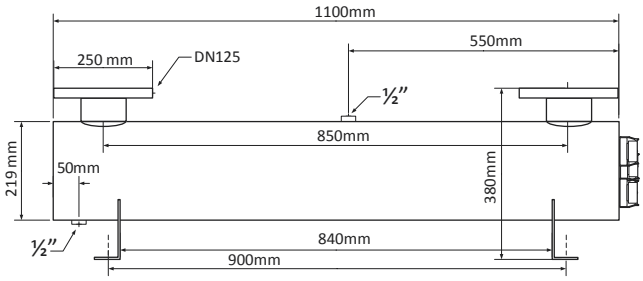

UV-C Pro Inox 600 W

Description	UV-C Pro stainless steel 400 W	UV-C Pro stainless steel 600 W
Recommended pool size	200 m³	300 m³
Lamp	T6 200W 1115 SPT	T6 200W 1115 SPT
Max. service life of lamp	16.000 h	16.000 h
UV-C lamp power	2 x 200 Watt	3 x 200 Watt
Wavelenght	254 nm	254 nm
Voltage	230 V AC 50/60 Hz	230 V AC 50/60 Hz
Current consumption	1.94 A	2.9 A
Material housing	Inox 316L	Inox 316L
Protection class	IP54	IP54
Max. pressure	6 bar (87 psi)	6 bar (87 psi)
Water temperature	0 - 55 °C	0 - 55 °C
Hour meter	only with control monitor	only with control monitor
Reactor diameter	Ø 204 mm	Ø 219 mm
Reactor length	1100 mm	1100 mm
Reactor shape	U	U
Connection mm	110 mm flange	140 mm flange
Connection DN	DN100 flange	DN125 flange
Recommended flow at 30 mJ/cm² (98 % transmission)	50 m³/h*	77 m³/h**
Recommended flow at 40 mJ/cm² (98 % transmission)	49 m³/h	77 m³/h
Recommended flow at 60 mJ/cm² (98 % transmission)	33 m³/h	52 m³/h
Max. flow	50 m³/h	77 m³/h
Weight	30 kg	42 kg
Code	**135**	**136**

* Maximum flow 50 m³/h (50 m³/h = 39 mJ/cm³)

* Maximum flow 77 m³/h (77 m³/h = 40 mJ/cm³)

03

WATER HEATING & DEHUMIDIFIERS

For a relaxing bath in your pool you need a comfortable water temperature. High demands are placed on the heat source: it should heat or cool at low cost, extend the pool season or should be integrated into an existing pool. Modern heat pumps are effective, quiet and cost-effective multi-talents. Heat exchangers and electric heaters heat the pool water regardless of the weather.

OVERVIEW

52 Inverter Heat Pump MIDA.Maxx
54 Inverter Heat Pump MIDA.Boost
56 Inverter Heat Pump MIDA.Force
58 Heat Pump MIDA.Black
60 Heat Pump MIDA.Quick
62 Heat Pump MIDA.Public
64 Heat Pump MIDA.Cool
66 WiFi-Adapter for Heat Pumps
67 Equipment for Heat Pumps
68 Pool Dehumidifiers
71 Heat Exchangers
72 Electric Heaters

Quick Overview heat pumps:

Standard equipment: Titan heat exchanger, manometer, cooling, heating, and automatic functionautomatic defrosting system, flow switch, winter cover, registered with WEEE-Reg.-Nr. DE 54436223 for the recycling of old devices.

Model	Temperature range	Housing	Sizes available	max. pool volume	WiFi-option	refrigerant	Display	min./max. water temperature
MIDA.Maxx* Full-Inverter	von -15°C bis + 43°C	stainless steel V4A (316)	11-29 kW	ca. 180 m³	no	R32, R410A	Touch TFT	+8 °C / +43 °C
MIDA.Boost* Full-Inverter	von -15 °C bis + 43 °C	ABS plastic	12-24 kW	ca. 120 m³	yes	R32	Touch LCD	+8 °C / +43 °C
MIDA.Force* Full-Inverter	von -5 °C bis + 40 °C	ABS plastic	7-17 kW	ca. 75 m³	yes	R32	Touch LCD	+8 °C / +40 °C
MIDA.Black* ON/OFF	von -10 °C bis + 40 °C	ABS plastic	8-26 kW	ca. 150 m³	yes	R32	LED	+8 °C / +40 °C
MIDA.Quick ON/OFF	von -5 °C bis + 35 °C	galvanized steel	4-26 kW	ca. 135 m³	yes	R410A	LED	+8 °C / +40 °C
MIDA.Public	from -15 °C to + 43 °C	galvanized steel	55-190 kW	ca. 850 m³	yes	R410A	LCD	+8 °C / +43 °C
MIDA.Cool	from -7 °C to + 45 °C	galvanized steel	45–210 kW	ca. 750 m³	yes	R410A	LCD	+8 °C / +35 °C

* retail-protected product – no distribution over internet

Other models and sizes on request

HEAT PUMPS

NEW

FULL-INVERTER HEAT PUMP MIDA.Maxx

FEATURES
- available in sizes from 11-29 kW
- COP value up to 13,2
- operating range from -15°C to +43°C
- pool volume about 180 m³ (depending on size)
- Housing made of stainless steel V4A / AISI 316
- operating modes: cooling, heating, automatic
- automatic defrosting
- with titanium heat exchanger, excellent suitable for salt water and chlorine
- with 4,3" lor touch TFT display
- incl. winter cover
- incl. flow switch
- max. water temperature (operation) +41°C
- refrigerant R32 oder R410A (depending on size)
- manometer
- electrical protection: fuse slow (C-machine), RCCB 30mA <0.1s

With protective housing for the display

For accessories see catalog page 67

HIGHLY EFFICENT AND ENERGY-SAVING

With the heat pump MIDA.Maxx, MIDA.Boost und MIDA.Force you decide to use the technically advanced solution of the Inverter technology. In this technology, the compressor speed adapts from 18 - 99 Hz continuously precisely to the required cooling or heating demand. Through this effective regulation, a particularly energy-saving and material-saving operation is achieved with a high seasonal performance factor in comparison to conventional heat pumps.
In addition, the heat pump operates very quietly. During the startup process, the inverter technology needs only 1/3 time compared with conventional system.

Compared to standard heat pumps, MIDA.Maxx, MIDA.Boost und MIDA.Force achieves a higher COP and requires a substantially shorter start-up time. This saves costs.

R32 NEW REFRIGERANT GAS

Full Inverter

R410A OZONE FRIENDLY

Which advantages are given with by Inverter Technology:
- stepless control
- higher servicelife
- shorter starting curve of the heat pump
- less starting power is needed
- very quiet operation
- increased COP figures

6 years warranty
on Mitsubishi-Kompressor

TÜV SÜD

TÜVRheinland

Since the design of the heat pump depends on several factors, the current heat requirement should generally be determined beforehand. For this there is a calculation tool, which we gladly make available to you on our website.

VERSIONS MIDA.Maxx

	Type	MIDA.Maxx 11	MIDA.Maxx 17	MIDA.Maxx 25	MIDA.Maxx 29
	Air outlet	vertical	vertical	vertical	vertical
	Pool volume	max. about 60 m³	max. about 85 m³	max. about 130 m³	max. about 180 m³
	Water flow (recommended)	3,8 m³/h	4,7 m³/h	8,2 m³/h	10,3 m³/h
	Connection	50 mm left	50 mm left	50 mm left	50 mm left
Measurement conditions Air temperature 24 °C* Water temperature 26°C	Heating power	2,8-11,2 kW 9,55 - 38,2 kBtu/h	3,7-16,5 kW 12,6 - 56,3 kBtu/h	5,9-24,5 kW 20,1 - 83,6 kBtu/h	6,8-28,9 kW 23,2 - 98,6 kBtu/h
	Input power	0,2-1,78 kW 0,68 - 6,1 kBtu/h	0,28-2,66 kW 0,96 - 9,1 kBtu/h	0,45-4,02 kW 1,54 - 13,7 kBtu/h	0,57-4,82 kW 1,94 - 16,5 kBtu/h
	Operating current	0,87 - 7,74 A	1,2 - 11,57 A	0,76 - 6,8 A	1- 8,2 A
	COP	6,3 - 13,2	6,2 - 13,2	6,1 - 13,2	6 - 13,2
Measurement conditions Air temperature 15°C* Water temperature 26°C	Heating power	2,1 - 8 kW 7,2 - 27,3 kBtu/h	3,2 - 11,5 kW 10,9 - 39,3 kBtu/h	4,8 - 17,5 kW 16,4 - 59,7 kBtu/h	5,5 - 22,6 kW 18,8 - 77,1 kBtu/h
	Input power	0,28 - 1,7 kW 0,96 - 5,8 kBtu/h	0,43 - 2,45 kW 1,47 - 8,4 kBtu/h	0,65 - 3,72 kW 2,22 - 12,7 kBtu/h	0,74 - 4,81 kW 2,52 - 16,4 kBtu/h
	Operating current	1,22 - 7,4 A	1,87 - 10,7 A	1,1 - 6,3 A	1,3 - 8,2 A
	COP	4,7 - 7,4	4,7 - 7,4	4,7 - 7,4	4,7 - 7,4
	Min. water temperature	+6 °C	+6 °C	+6 °C	+6 °C
	Safeguarding	12 A	16 A	3 x 11 A	3 x 13 A
	Voltage / frequency range	230V/ 1 ph 18-84Hz	230V/ 1 ph 18-96Hz	400V/ 3 ph 18-84Hz	400V/ 3 ph 18-99Hz
	Compressor brand	Mitsubishi	Mitsubishi	Mitsubishi	Mitsubishi
	Compressor	rotating	rotating	rotating	rotating
	Number of fans	1	1	1	1
	Cable cross section	3 x 2,5 mm²	3 x 4 mm²	5 x 2,5 mm²	5 x 2,5 mm²
	Noise pressure level[1]	21-42 dB(A)	23-42 dB(A)	24-42 dB(A)	25-42 dB(A)
	Noise pressure level[2]	40-52 dB(A)	41-54 dB(A)	42-58 dB(A)	42-59 dB(A)
	Protection class	IPX4	IPX4	IPX4	IPX4
	Refrigerant charge	0,7 kg	1,2 kg	2,5 kg	2,7 kg
	GWP-value	675	675	2088	2088
	Alternative placement display	possible	possible	possible	possible
	Refrigerant	R32	R32	R410A	R410A
	Net dimensions WxDxH	1050x440x709 mm	736x910x910 mm	736x910x910 mm	736x910x910 mm
	Shipping dimensions WxDxH	1130x470x850 mm	750x930x1045 mm	750x930x1045 mm	750x930x1045 mm
	Net weight	68 kg	98 kg	118 kg	130 kg
	Delivery weight	73 kg	113 kg	126 kg	148 kg
	Code	**2770**	**2771**	**2772**	**2773**

1) measured sound pressure level at 10 m (22 - 84 Hz)

2) measured sound pressure level at 1 m (22 - 85 Hz)

* at 70% - 80% humidity

FULL-INVERTER HEAT PUMP MIDA.Boost

NEW

MIDA.Boost 12 + 18

FEATURES
- available in sizes from 12 – 24 kW
- COP value up to 13,57
- operating range from -15°C to +43°C
- pool volume about 120 m³ (depending on size)
- housing made of ABS plastic, color: white/black
- operating modes: cooling, heating, automatic
- automatic defrosting
- with titanium heat exchanger, excellent suitable for salt water and chlorine
- with 5 inch color touchscreen LCD display
- incl. winter cover
- incl. flow switch
- max. water temperature (operation) +43°C
- refrigerant R32
- Manometer
- electrical protection: fuse slow (C-machine), RCCB 30mA <0.1s

R32 NEW REFRIGERANT GAS

Full Inverter

TÜVRheinland

control via app – WiFi-Adapter available as option, see page 66

For accessories see catalog page 67

6 years warranty
on Mitsubishi-Kompressor

MIDA.Boost 24

Since the design of the heat pump depends on several factors, the current heat requirement should generally be determined beforehand. For this there is a calculation tool, which we gladly make available to you on our website.

VERSIONS MIDA.Boost

	Type	MIDA.Boost 12	MIDA.Boost 18	MIDA.Boost 24
	Air outlet	horizontal	horizontal	horizontal
	Pool volume	max. about 60 m³	max. about 85 m³	max. about 120 m³
	Water flow (recommended)	4,2 m³/h	5,3 m³/h	8,6 m³/h
	Connection	50 mm on the back	50 mm on the back	50 mm on the back
Measurement conditions Air temperature 27°C** Water temperature 26°C	Heating power	2,85 – 12 kW / 9,69 – 40,8 kBtu/h	3,77 – 17 kW / 12,58 – 57,8 kBtu/h	5,7 – 24,2 kW / 19,38 – 82,38 kBtu/h
	Input power	0,21 – 2,12 kW	0,3 – 3,02 kW	0,46 – 4,8 kW
	Operating current	0,95 – 9,2 A	1,3 – 13,1 A	3 x 2,3 – 8,5 A
	COP	5,66 – 13,57	5,63 – 12,57	5,04 – 12,39
Measurement conditions Air temperature 15°C* Water temperature 26°C	Heating power	2,25 – 9,7 kW / 7,65 – 32,98 kBtu/h	2,92 – 12,4 kW / 9,93 – 42,16 kBtu/h	4,68 – 19,9 kW / 15,91 – 67,66 kBtu/h
	Input power	0,32 – 2,08 kW	0,44 – 2,86 kW	0,72 – 4,74 kW
	Operating current	1,4 – 9 A	2 – 12,4 A	3 x 1,8 – 8 A
	COP	4,66 – 7,03	4,34 – 6,64	4,2 – 6,5
	Min. water temperature	+8 °C	+8 °C	+8 °C
	Safeguarding	13 A	16 A	3 x 13 A
	Voltage / frequency range	230 V / 1 ph 20–65 Hz	230 V / 1 ph 20–85 Hz	400 V / 3 ph 20–70 Hz
	Compressor brand	Mitsubishi	Mitsubishi	Mitsubishi
	Compressor	rotating	rotating	rotating
	Number of fans	1	1	2
	Cable cross section	3 x 2,5 mm²	3 x 2,5 mm²	5 x 2,5 mm²
	Noise pressure level[1]	22–32 dB(A)	24–33 dB(A)	26–37 dB(A)
	Noise pressure level[2]	42–52 dB(A)	44–53 dB(A)	46–57 dB(A)
	Protection class	IPX4	IPX4	IPX4
	Refrigerant charge	0,65 kg	0,8 kg	1,2 kg
	GWP-value	675	675	675
	Alternative placement display	possible	possible	possible
	Net dimensions WxDxH	1046 x 453 x 768 mm	1161×490×868 mm	1161×470×1274 mm
	Shipping dimensions WxDxH	1130×480×780 mm	1210×510×880 mm	1210×495×1300 mm
	Net weight	65 kg	75 kg	117 kg
	Delivery weight	80kg	90 kg	137 kg
	Code	**2760**	**2761**	**2762**

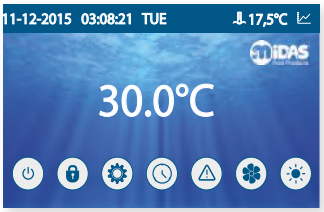

WiFi

Laden im App Store

JETZT BEI Google Play

1) measured sound pressure level at 10 m (22 - 85 Hz) 2) measured sound pressure level at 1 m (22 - 85 Hz) * at 70% humidity ** at 80% humidity

FULL-INVERTER HEAT PUMP MIDA.Force

NEW

FEATURES
- available in sizes from 7-17 kW
- COP value up to 11,25
- operating range from -5°C to +40°C
- pool volume about 85 m³ (depending on size)
- housing made of ABS plastic, Color: black
- operating modes: cooling, heating, automatic
- automatic defrosting
- with titanium heat exchanger, excellent suitable for salt water and chlorine
- with 4,7" Glass Touch LCD Display b/w
- incl. winter cover
- incl. flow switch
- max. water temperature (operation) +43 °C
- refrigerant R32
- manometer
- electrical protection: fuse slow (C-machine), RCCB 30mA <0.1s

R32 NEW REFRIGERANT GAS

Full Inverter

TÜVRheinland®

WiFi®

Laden im App Store

JETZT BEI Google Play

control via app – WiFi-Adapter available as option, see page 66

For accessories see catalog page 67

6 years warranty
on Mitsubishi-Kompressor

Since the design of the heat pump depends on several factors, the current heat requirement should generally be determined beforehand. For this there is a calculation tool, which we gladly make available to you on our website.

VERSIONS MIDA.Force

	Type	MIDA.Force 7	MIDA.Force 12	MIDA.Force 17
	Air outlet	horizontal	horizontal	horizontal
	Pool volume	max. ca. 35 m³	max. ca. 60 m³	max. ca. 85 m³
	Water flow (recommended)	2,4 m³/h	4,9 m³/h	5,2m³/h
	Connection	50 mm on the back	50 mm on the back	50 mm on the back
Measurement conditions Air temperature 27°C** Water temperature 26°C	Heating power	1,12-6,80 kW	1,80-11,90 kW	3,25-16,80 kW
	Input power	0,11-1,27 kW	0,16-1,92 kW	0,30-2,91 kW
	Operating current	1,14-5,81 A	1,08-8,96 A	1,30-12,65 A
	COP	5,35-10,18	6,19-11,25	5,77-10,83
Measurement conditions Air temperature 15°C* Water temperature 26°C	Heating power	0,95-5,5 kW	1,60-8,40 kW	2,55-12,60 kW
	Input power	0,21-1,25 kW	0,26-1,81 kW	0,44-2,80 kW
	Operating current	0,91-5,43 A	1,13-7,86 A	1,91-12,17 A
	COP	4,40-5,70	4,64-6,15	4,50-5,80
	Min. water temperature	+8 °C	+8 °C	+8 °C
	Safeguarding	10 A	16 A	16 A
	Voltage / frequency range	230 V / 1 ph 20–70 Hz	230 V / 1 ph 20–95 Hz	230 V / 1 ph 20–85 Hz
	Compressor brand	Mitsubishi	Mitsubishi	Mitsubishi
	Compressor	rotating	rotating	rotating
	Number of fans	1	1	1
	Cable cross section	3 x 2,5 mm²	3 x 2,5 mm²	3 x 2,5 mm²
	Noise pressure level[1]	19-29 dB(A)	22-32 dB(A)	24-33 dB(A)
	Noise pressure level[2]	38-50 dB(A)	42-53 dB(A)	43-54 dB(A)
	Protection class	IPX4	IPX4	IPX4
	Refrigerant charge	0,35 kg	0,48 kg	0,65 kg
	GWP-value	675	675	675
	Alternative placement display	possible	possible	possible
	Net dimensions WxDxH	1000 x 418 x 605 mm	1000 x 418 x 605 mm	1046x 435 x 767 mm
	Shipping dimensions WxDxH	1030 x 435 x 615 mm	1030 x 435 x 615 mm	1130 x 480 x 780 mm
	Net weight	42 kg	46 kg	60 kg
	Delivery weight	51 kg	55 kg	73 kg
	Code	**2675**	**2676**	**2677**

1) measured sound pressure level at 10 m (20 - 85 Hz) 2) measured sound pressure level at 1 m (20 - 85 Hz) * at 70% humidity ** at 80% humidity

HEAT PUMP MIDA.Black

NEW

R32
NEW REFRIGERANT GAS

WiFi

Laden im App Store

JETZT BEI Google Play

VERSIONS MIDA.Black

	Type	MIDA.Black 8	MIDA.Black 11	MIDA.Black 14
	Air outlet	horizontal	horizontal	horizontal
	Pool volume	max. ca. 30 m³	max. ca. 55 m³	max. ca. 75 m³
	Water flow (recommended)	5,0 m³/h	6,0 m³/h	7,0 m³/h
	Connection	50 mm on the back	50 mm on the back	50 mm on the back
Measurement conditions Air temperature 24°C* Water temperature 26°C	Heating power	7,6 kW/ 25,9 kBtu/h	10,7 kW/ 36,5 kBtu/h	14,5 kW/ 49,5 kBtu/h
	Input power	1,36 kW	1,96 kW	2,29 kW
	Operating current	6,22 A	9,01 A	11,09 A
	COP	5,6	5,5	6,3
Measurement conditions Air temperature 15°C* Water temperature 26°C	Heating power	6,1 kW/ 20,7 kBtu/h	8,4 kW/ 28,7 kBtu/h	11,9 kW/ 40,6 kBtu/h
	Input power	1,21 kW	1,79 kW	2,34 kW
	Operating current	5,55 A	8,19 A	10,71 A
	COP	5,0	4,7	5,1
	Min. water temperature	+8 °C	+8 °C	+8 °C
	Safeguarding	16 A	16 A	20 A
	Voltage / frequency range	230 V / 1 ph / 50 Hz	230 V / 1 ph / 50 Hz	230 V / 1 ph / 50 Hz
	Compressor brand	GREE	GREE	GREE/HIGHLY
	Compressor	rotating	rotating	rotating
	Number of fans	1	1	1
	Cable cross section	3 x 2,5 mm²	3 x 2,5 mm²	3 x 4,0 mm²
	Noise pressure level[1]	38 dB(A)	38 dB(A)	40 dB(A)
	Noise pressure level[2]	52 dB(A)	52 dB(A)	55 dB(A)
	Protection class	IPX4	IPX4	IPX4
	Refrigerant charge	0,75 kg	0,9 kg	1,0 kg
	GWP-value	675	675	675
	Alternative placement display	possible	possible	possible
	Display extension	incl. 10 m Cable	incl. 10 m Cable	incl. 10 m Cable
	Net dimensions WxDxH	970 x 360 x 585 mm	1045 x 370 x 625 mm	1110 x 416 x 711 mm
	Shipping dimensions WxDxH	1060 x 380 x 615 mm	1130 x 390 x 665 mm	1150 x 450 x 840 mm
	Net weight	48 kg	54 kg	68 kg
	Delivery weight	55 kg	62 kg	81 kg
	Code	**2950**	**2951**	**2952**

Since the design of the heat pump depends on several factors, the current heat requirement should generally be determined beforehand. For this there is a calculation tool, which we gladly make available to you on our website.

1) measured sound pressure level at 10 m 2) measured sound pressure level at 1 m * at 60-70% humidity

FEATURES

- available in sizes from 8 – 26 kW
- COP value up to 4,5-6,6
- operating range from -10°C to +40°C
- pool volume about 150 m³ (depending on size)
- housing made of ABS plastic, Color: black
- operating modes: cooling, heating, automatic
- automatic defrosting
- with titanium heat exchanger, excellent suitable for salt water and chlorine
- with LED-Display
- incl. winter cover
- incl. flow switch
- max. water temperature (operation) +40°C
- refrigerant R32
- manometer
- electrical protection: fuse slow (C-machine), RCCB 30mA <0.1s

control via app – WiFi-Adapter available as option,

see page 66

For accessories see catalog page 67

MIDA.Black 17	MIDA.Black 21	MIDA.Black 26
horizontal	horizontal	horizontal
max. ca. 95 m³	max. ca. 120 m³	max. ca. 150 m³
10,0 m³/h	12,0 m³/h	15,0 m³/h
50 mm on the back	50 mm on the back	50 mm on the back
17,1 kW/ 58,4 kBtu/h	20,6 kW/ 70,3 kBtu/h	24,6 kW/ 83,6 kBtu/h
2,74 kW	3,14 kW	3,94 kW
3x5,97 A	3 x 7,36 A	3 x 8,29 A
6,3	6,6	6,2
14,9 kW/ 50,7 kBtu/h	7,92 kW/ 61,1 kBtu/h	20,7 kW/ 70,6 kBtu/h
3,02 kW	3,57 kW	4,26 kW
3x5,89 A	3 x 7,45 A	3 x 8,66 A
4,9	5,0	4,9
+8 °C	+8 °C	+8 °C
3x10 A	3 x 10 A	3 x 16 A
400 V / 3 ph / 50 Hz	400 V / 3 ph / 50 Hz	400 V / 3 ph / 50 Hz
GREE	GREE	GREE
rolling	rolling	rolling
1	1	2
5x 2,5 mm²	5 x 2,5 mm²	5 x 2,5 mm²
41 dB(A)	42 dB(A)	42 dB(A)
59 dB(A)	60 dB(A)	60 dB(A)
IPX4	IPX4	IPX4
1,1 kg	1,45 kg	1,75 kg
675	675	675
possible	possible	possible
incl. 10 m Cable	incl. 10 m Cable	incl. 10 m Cable
1110 x 416 x 711 mm	1110 x 446 x 958 mm	1110 x 446 x 1260 mm
1150 x 450 x 840 mm	1150 x 475 x 1088 mm	1150 x 475 x 1388mm
84 kg	100 kg	118 kg
97 kg	117 kg	136 kg
2953	**2954**	**2955**

5 years warranty
on GREE-compressor
on HIGHLY-compressor

MIDA.Black 26

HEAT PUMP MIDA.Quick

R410A
OZONE FRIENDLY

VERSIONS MIDA.Quick

	Type	MIDA.Quick 4	MIDA.Quick 7	MIDA.Quick 10	MIDA.Quick 13
	Air outlet	horizontal	horizontal	horizontal	horizontal
	Pool volume	max. ca.10 m³	max. ca. 20 m³	max. ca. 45 m³	max. ca. 60 m³
	Water flow (recommended)	1,5 m³/h	2,3 m³/h	4,5 m³/h	5,3 m³/h
	Connection	50 mm on the back	50 mm on the back	50 mm on the back	50 mm on the back
Measurement conditions Air temperature 24°C* Water temperature 26°C	Heating power	3,5 kW/ 11,9 kBtu/h	6,7 kW/ 2 2,7 kBtu/h	9,5 kW/ 32,4 kBtu/h	12,5 kW/ 42,65 kBtu/h
	Input power	0,76 kW	1,31 kW	1,9 kW	2,8 kW
	Operating current	3,5 A	5,69 A	8,7 A	12,8 A
	COP	4,6	5,1	5,0	4,5
Measurement conditions Air temperature 15°C* Water temperature 26°C	Heating power	2,6 kW/ 8,9 kBtu/h	4,2 kW/ 14,2 kBtu/h	7,1 kW/ 24,2 kBtu/h	9,4 kW/ 32,4 kBtu/h
	Input power	0,7 kW	0,97 kW	1,8 kW	2,3 kW
	Operating current	3,0 A	4,21 A	8,2 A	10,7 A
	COP	3,7	4,3	4,0	4,1
	Min. water temperature	+8 °C	+8 °C	+8 °C	+8 °C
	Safeguarding	10 A	10 A	16 A	20 A
	Voltage / frequency range	230 V / 1 ph / 50 Hz	230 V / 1 ph / 50 Hz	230 V / 1 ph / 50 Hz	230 V / 1 ph / 50 Hz
	Compressor brand	GREE	GREE	GREE	GREE
	Compressor	rotating	rotating	rotating	rotating
	Number of fans	1	1	1	1
	Cable cross section	3 x 1,5 mm²	3 x 1,5 mm²	3 x 2,5 mm²	3 x 2,5 mm²
	Noise pressure level[1]	35 dB(A)	38 dB(A)	40 dB(A)	40 dB(A)
	Noise pressure level[2]	47 dB(A)	51 dB(A)	53 dB(A)	53 dB(A)
	Protection class	IPX4	IPX4	IPX4	IPX4
	Refrigerant charge	2088	2088	2088	2088
	GWP-value	0,5 kg	0,55 kg	1,0 kg	1,1 kg
	Alternative placement display	possible	possible	possible	possible
	Net dimensions WxDxH	811 x 305 x 583 mm	811 x 305x 583mm	974 x 385 x 605 mm	974 x 385 x 605 mm
	Shipping dimensions WxDxH	910 x 310 x 590 mm	910x 310x 590 mm	1070 x 390 x 615 mm	1070 x 390 x 615 mm
	Net weight	32 kg	35 kg	49 kg	63 kg
	Delivery weight	37 kg	37 kg	56 kg	70 kg
	Code	**2700**	**2708**	**2703**	**2704**

Since the design of the heat pump depends on several factors, the current heat requirement should generally be determined beforehand. For this there is a calculation tool, which we gladly make available to you on our website.

1) Measured sound pressure level at 10 m 2) Measured sound pressure level at 1 m * at 60-70% humidity

NEW

MIDA.Quick 17	MIDA.Quick 21	MIDA.Quick 26
horizontal	horizontal	horizontal
max. ca. 95 m³	max. ca. 120 m³	max. ca. 135 m³
6,0 m³/h	8,0 m³/h	7,9 m³/h
50 mm on the back	50 mm at the side	50 mm at the side
15,8 kW/ 53,91 kBtu/h	18,6 kW/ 63,46 kBtu/h	25,0 kW/ 85,0 kBtu/h
2,7 kW	3,2 kW	5,0 kW
13,3 A	15,6 A	3 x 8,3 A
5,9	5,9	5,0
12,5 kW/ 42,65 kBtu/h	15,4 kW/ 52,54 kBtu/h	18,4 kW/ 62,78 kBtu/h
2,5 kW	3,0 kW	4,1 kW
12,6 A	15,1 A	3 x 7,9 A
4,9	5,1	4,5
+8 °C	+8 °C	+8 °C
20 A	20 A	3 x 10 A
230 V / 1 ph / 50 Hz	230 V / 1 ph / 50 Hz	400 V / 3 ph / 50 Hz
Mitsubishi	Sanyo	Sanyo
rolling	rolling	rolling
1	2	2
3 x 4,0 mm²	3 x 4,0 mm²	5 x 2,5 mm²
40 dB(A)	40 dB(A)	42 dB(A)
53 dB(A)	53 dB(A)	58 dB(A)
IPX4	IPX4	IPX4
2088	2088	2088
1,3 kg	2,6 kg	2,7 kg
possible	possible	possible
1134 x 475 x 845 mm	1120 x 475 x 1240 mm	1120 x 475 x 1240 mm
1230 x 495 x 855 mm	1200 x 490 x 1280 mm	1200 x 490 x 1280 mm
97 kg	103 kg	130 kg
111 kg	118 kg	140 kg
2705	**2706**	**2707**

5 years warranty
on GREE-compressor
on Mitsubishi-compressor
on Sanyo-compressor

FEATURES

- available in sizes from 4-26 kW
- COP-value up to 3,7 – 5,9
- operating range from -5°C bis +35°C
- pool volume about 135 m³ (depending on size)
- Housing made of stainless steel V4A / AISI 316, Color: RAL 7016 anthracite gray
- operating modes: cooling, heating, automatic
- automatic defrosting
- with titanium heat exchanger, excellent suitable for salt water and chlorine
- with LED-Display
- incl. winter cover
- incl. flow switch
- max. water temperature (operation) +40°C
- refrigerant R32
- manometer
- electrical protection: fuse slow (C-machine), RCCB 30mA <0.1s

control via app – WiFi-Adapter available as option,

see page 66

For accessories see catalog page 67

MIDA.Quick 21 + 26

HEAT PUMP MIDA.Public

VERSIONS MIDA.Public

		Typ	MIDA.Public 55	MIDA.Public 95
		Air outlet	vertical	vertical
		Max. pool volume	250 m³	440 m³
		Water flow (recommended)	25 m³/h	28 m³/h
		Connection	63 mm	110 mm
HEATING		Heating power	55 kW / 187,7 kBtu/h	95 kW / 324,1 kBtu/h
Measurement conditions		Input power	9,65 kW / 32,93 kBtu/h	16,1 kW / 54,93 kBtu/h
Air temperature	24°C*	Operating current	3 x 17,18 A	3 x 28,8 A
Water temperature	26°C	COP	5,7	5,9
HEATING		Heating power	38 kW / 129,7 kBtu/h	62 kW / 211,5 kBtu/h
Measurement conditions		Input power	12,3 kW / 41,97 kBtu/h	15,4 kW / 52,55 kBtu/h
Air temperature	15°C*	Operating current	3 x 20,1 A	3 x 27,5 A
Water temperature	29°C	COP	3	5,2
COOLING		Cooling capacity	29,70 kW / 101,34 kBtu/h	37,25 kW / 127,09 kBtu/h
Measurement conditions		Consumed power	11,80 kW / 40,26	17,75 kW / 60,56 kBtu/h
Air	35 °C**	Operating current	3 x 20,26 A	3 x 35,32 A
Water	30 °C	EER	2,52	2,10
		Min. water temperature	+8 °C	+8 °C
		Safeguarding	3 x 23 A	3 x 40 A
		Voltage / frequency range	400 V / 3 pH / 50 Hz	400 V / 3 pH / 50 Hz
		Compressor brand	Sanyo	Sanyo
		Compressor	2 x scroll	4 x scroll
		Number of fans	2	3
		Cable cross section	5 x 8 mm²	5 x 16 mm²
		Noise pressure level[2]	60 dB(A)	61 dB(A)
		Protection class	IPX4	IPX4
		Refrigerant charge	2 x 2.5 kg	4 x 2.4 kg
		Alternative placement display	possible	possible
		Net dim. WxDxH	1448x730x1060 mm	2180x1080x1930 mm
		Shipping dim. WxDxH	1630x810x1180 mm	2240x1200x2050 mm
		Net weight	251 kg	374 kg
		Delivery weight	286 kg	413 kg
		Code	**2681**	**2682**

2) measured sound pressure level at 1 m * at 60–70 % humidity ** at 59.2 % humidity

FEATURES

- available in sizes from 55 – 190 kW
- COP value of 5.7 – 5.9
- operating range is -15 °C to +43 °C
- pool volume is 250 – 850 m³
- housing made of galvanized steel with powder painting, color: white
- cooling & heating function
- automatic defrosting
- with titanium heat exchanger, excellent suitable for salt water and chlorine
- with digital LCD display
- incl. water flow switch
- max. water temperature +43 °C
- refrigerant R410A
- RS485 connection port (centralized control)
- pressure gauge
- **equipment, see page 67**

The design of the heat pump depends on several factors. Therefore, the current heat demand should generally be determined beforehand. On request we will send you a calculation tool.

2 years manufacturer's warranty
Warranty on Sanyo compressor: 6 years
Warranty on Copeland compressor: 6 years

	MIDA.Public 120	MIDA.Public 145	MIDA.Public 190
	vertical	vertical	vertical
	550 m³	650 m³	850 m³
	35 m³/h	42 m³/h	60 m³/h
	110 mm	110 mm	110 mm
	120 kW / 409,4 kBtu/h	145 kW / 494,7 kBtu/h	190 kW / 648,3 kBtu/h
	21,8 kW / 74,38 kBtu/h	25,4 kW / 86,66 kBtu/h	32,8 kW / 111,91 kBtu/h
	3 x 39 A	3 x 45,4 A	3 x 58,6 A
	5,9	5,71	5,79
	80 kW / 273 kBtu/h	90 kW / 307, kBtu/h	125 kW / 426,5 kBtu/h
	20,0 kW / 68,24 kBtu/h	29,4 kW / 100,31 kBtu/h	30,8 kW / 105,09 kBtu/h
	3 x 35,8 A	3 x 42,0 A	3 x 55,1 A
	5,1	5,1	5,2
	51,80 kW / 176,76 kBtu/h	59,56 kW / 203,23 kBtu/h	95,80 kW / 326,85 kBtu/h
	20,29 kW / 69,23 kBtu/h	27,45 kW / 93,66 kBtu/h	37,88 kW / 129,25 kBtu/h
	3 x 35,28 A	3 x 51,71 A	3 x 75,34 A
	2,55	2,17	2,53
	+8 °C	+8 °C	+8 °C
	3 x 46 A	3 x 55 A	3 x 82 A
	400 V / 3 pH / 50 Hz	400 V / 3 pH / 50 Hz	400 V / 3 pH / 50 Hz
	Sanyo	Copeland	Copeland
	2x scroll	2 x scroll	4 x scroll
	3	2	2
	5 x 16 mm²	5 x 25 mm²	5 x 35 mm²
	62 dB(A)	63 dB(A)	67 dB(A)
	IPX4	IPX4	IPX4
	2 x 6.5 kg	2 x 8.0 kg	4 x 6.0 kg
	possible	possible	possible
	2180x1080x1930 mm	2180x1080x2060 mm	2180x1080x2060 mm
	2240x1200x2050 mm	2280x1180x2220 mm	2280x1180x2220 mm
	560 kg	664 kg	891 kg
	584 kg	709 kg	964 kg
	2683	**2684**	**2685**

Heat Pump MIDA.Cool

Not just quieter and easier operation beyond your imagination, this commercial heat pump also ensure constant and reliable pool water temperature for cooling and heating on every commercial occasions.

Where to use: Be used in public places all over the world, such as hotels, schools, aqua parks, gyms, etc.

Centralized Control: It makes temperature adjustment and failure review much easier and more practical. On the other hand, the while units can work together with higher efficiency without interfered by any failure of the salve unit during operation.

VERSIONS MIDA.Cool

	Type	MIDA.Cool 30	MIDA.Cool 60
	Air outlet	vertical	vertical
	Max. pool volume	190 m³	350 m³
	Water flow (recommended)	10 m³/h	20 m³/h
	Connection	63 mm	90 mm
HEATING Measurement conditions Air temperature 24°C* Water temperature 26°C	Heating power	45.0 kW / 153.0 kBtu/h	85 kW.0 / 289.0 kBtu/h
	Input power	9.5 kW / 32.3 kBtu/h	18.4 kW / 62.56 kBtu/h
	Operating current	3 x 16.9 A	3 x 32.8 A
	COP	4.3	4.3
HEATING Measurement conditions Air temperature 15°C* Water temperature 26°C	Heating power	33.0 kW / 112.2 kBtu/h	62.3 kW / 213.52 kBtu/h
	Input power	8.24 kW / 28.00 kBtu/h	16.30 kW / 55.42 kBtu/h
	Operating current	3 x 15.57 A	3 x 31.6 A
	COP	4.0	4.0
COOLING Measurement conditions Air 43 °C** Water 32 °C	Cooling capacity	30.0 kW / 120.0 kBtu/h	60.0 kW / 204.0 kBtu/h
	Input power	10.4 kW / 35.3 kBtu/h	20.8 kW / 70.7 kBtu/h
	Operating current	3 x 18.5 A	3 x 37 A
	EER	4.3	3
	Min. water temperature	+8 °C	+8 °C
	Safeguarding	3 x 40 A	3 x 63 A
	Voltage / frequency range	400 V / 3 pH / 50 Hz	400 V / 3 pH / 50 Hz
	Compressor brand	Copeland	Copeland
	Compressor	2 x scroll	4 x scroll
	Number of fans	2	2
	Cable cross section	3 x 6 mm²	3 x 10 mm²
	Noise pressure level[2]	61 dB(A)	63 dB(A)
	Protection class	IPX4	IPX4
	Refrigerant charge	2 x 2.5 kg	4 x 2.2 kg
	Alternative placement display	possible	possible
	Net dim. WxDxH	1490 x 735 x 1130 mm	2050 x 900 x 1820 mm
	Shipping dim. WxDxH	1510 x 790 x 1305 mm	2150 x 1020 x 1900 mm
	Net weight	251 kg	530 kg
	Delivery weight	288 kg	553 kg
	Code	**2690**	**2691**

2) measured sound pressure level at 1 m * at 62,8 % humidity ** at 70 % humidity

FEATURES
- available in sizes from 30 – 120 kW (cooling)
- available in sizes from 45 – 160 kW (heating)
- COP value of 3.0 – 4.3 (cooling)
- COP value of 4.0 – 4.3 (heating)
- operating range is –7 °C to +45 °C
- pool volume is 190 – 750 m³
- housing made of galvanized steel with powder painting, color: white
- cooling & heating function
- automatic defrosting
- patented dual coil titanium heat exchanger: enlarge the exchanging surface and increases the efficiency by providing an sufficient action area
- with digital LCD display
- incl. water flow switch
- max. water temperature 35 °C
- refrigerant R407C
- RS485 connection port (centralized control)
- pressure gauge
- **equipment, see page 67**

Details:
- Copeland compressor with precise energy stage settings, ensure the working unit to achieve the desired energy saving effect.
- variable speed fan: the working unit can adjust the fan speed at any time to reduce the input power and even the noise level to achieve silent running.

2 years manufacturer's warranty
Warranty on Sanyo compressor: 6 years
Warranty on Copeland compressor: 6 years

MIDA.Cool 75	MIDA.Cool 120	MIDA.Cool 150
vertical	vertical	vertical
450 m³	650 m³	750 m³
25 m³/h	40 m³/h	60 m³/h
110 mm	110 mm	110 mm
105.0 kW / 357.0 kBtu/h	160.0 kW / 544.0 kBtu/h	210.0 kW / 714.0 kBtu/h
21.6 kW / 73.44 kBtu/h	34.2 kW / 116.28 kBtu/h	44.8 kW / 152.32 kBtu/h
3 x 38.6 A	3 x 61 A	3 x 79.8 A
4.3	4.3	4.3
73.7 kW / 250.58 kBtu/h	90.7 kW / 308.38 kBtu/h	122 kW / 414.8 kBtu/h
35.50 kW / 120.70 kBtu/h	21.00 kW / 105.40 kBtu/h	29.80 kW / 101.32 kBtu/h
3 x 17.7 A	3 x 41.2 A	3 x 60.8 A
4.2	4.3	4.2
75.0 kW / 255.0 kBtu/h	120.0 kW / 408.0 kBtu/h	150.0 kW / 510.0 kBtu/h
26.0 kW / 88.4 kBtu/h	41.6 kW / 141.4 kBtu/h	52.1 kW / 177.1 kBtu/h
3 x 46.3 A	3 x 74.2 A	3 x 92.8 A
4.3	4.3	3.2
+8 °C	+8 °C	+8 °C
3 x 63 A	3 x 100 A	3 x 100 A
400 V / 3 pH / 50 Hz	400 V / 3 pH / 50 Hz	400 V / 3 pH / 50 Hz
Copeland	Copeland	Copeland
2 x scroll	3 x scroll	4 x scroll
3	3	4
3 x 10 mm²	3 x 25 mm²	3 x 25 mm²
63 dB(A)	65 dB(A)	67 dB(A)
IPX4	IPX4	IPX4
2 x 6.7 kg	3 x 5.0 kg	4 x 5.0 kg
possible	possible	possible
2170 x 1070 x 2100 mm	2170 x 1070 x 2100 mm	2850 x 1108 x 2220mm
2260 x 1180 x 2180 mm	2270 x 1220 x 2300 mm	2950 x 1160 x 2320 mm
789 kg	752 kg	969 kg
812 kg	790 kg	971 kg
2692	**2693**	**2694**

WIFI-ADAPTER FOR HEAT PUMPS

FREE APP!

Wireless control of the heat pumps with your tablet, smartphone or PC with internet access - at any time and at any place. Control with the Midas app your pool heat pump and inform yourself about important parameters such as the current watertemperature, the operating state or other indicators and changing them. This saves energy and protects the environment. The app is free in Google Play Store or the App Store on iTunes.

Erhältlich im App Store

JETZT BEI Google play

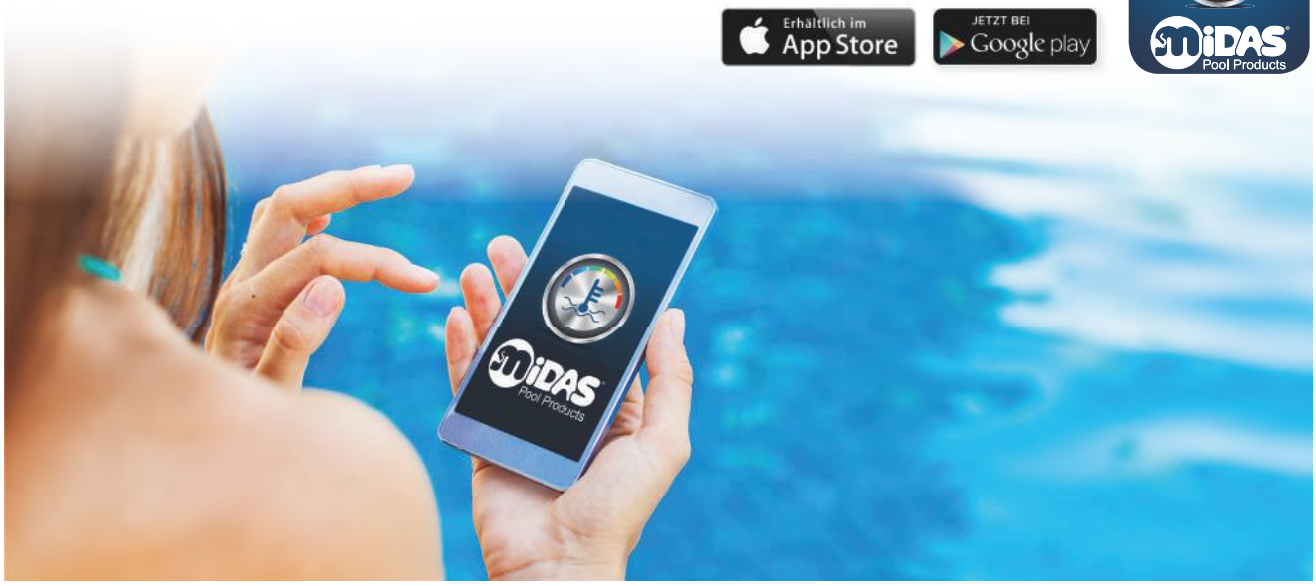

WiFi-Adapter* for MIDA.Boost and MIDA.Force

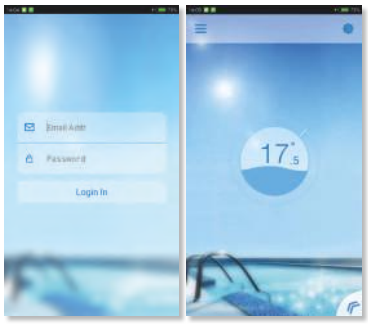

Article	Code	kg
WiFi-Adapter for MIDA.Boost and MIDA.Force	2605	0,2

WiFi-Adapter* for MIDA.Silver, MIDA.Shine and MIDA.Quick

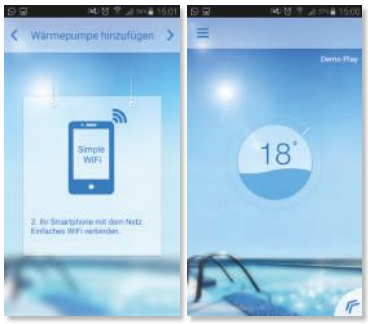

Article	Code	kg
WiFi-Adapter for MIDA.Silver and MIDA.Quick	2601	0,2

WiFi-Adapter* for MIDA.Black

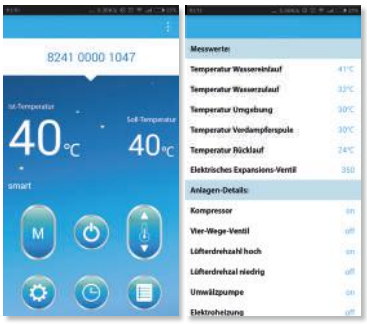

Article	Code	kg
WiFi-Adapter for MIDA.Black	2602	0,2

* also for retrofitting

EQUIPMENT FOR HEAT PUMPS

BYPASS SET FOR HEAT PUMPS

Bypass set for pool heat pumps consisting of the following Items:

Bypass set for heat pumps – 50 mm
3 x PVC-U ball valve d 50 mm
2 x PVC-U Tee d 50 mm
6 x PVC-U d 50 mm pipe à 15 cm
1 x Fermit adhesive blue 125 gr.
1 x Fermit cleaner 125 ml
2 x hose clamp St. Galvanitz 32 – 50 mm
2 x hose 50 x 38

Bypass set for heat pumps – 63 mm
3 x PVC-U ball valve d 63 mm
2 x PVC-U Tee d 63 mm
6 x PVC-U d 63 mm pipe à 15 cm
1 x Fermit adhesive blue 125 gr.
1 x Fermit cleaner 125 ml
2 x hose clamp St. Galvanitz 50 – 70 mm

Parts individually in box (not glued).

Article	Code	kg
Bypass set for heat pumps – 50 mm	2600	2,9
Bypass set for heat pumps – 63 mm	2605	3,3

PRO CLEAN HEAT PUMP AND AIR CONDITIONING CLEANER

Articel	VPE	Code
1 liter spray bottle	6	8047

8047

Accessoires MIDA.Boost

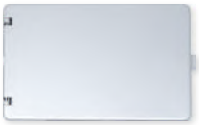

Article	Code
MIDA.Boost 10 m extension cable display / WiFi-modul	2670-E40
MIDA.Boost empty housing for external display attachment	2670-E41

Accessoires MIDA.Silver and MIDA.Quick

Article	Code
MIDA.Silver and MIDA.Quick 10 m extension cable display / WiFi-modul	3000-E32
MIDA.Silver and MIDA.Quick empty housing for external display attachment	3000-E33

WINTER COVERS FOR HEAT PUMPS

NEW

Winter cover for	Dimensions (WxDxH)	Code	kg
MIDA.Maxx 11	1.130 x 470 x 850 mm	2607	0,5
MIDA.Maxx 17+25+29	750 x 930 x 1045 mm	2608	0,5
MIDA.Boost 12	1.100 x 440 x 750 mm	2624	0,5
MIDA.Boost 18	1.190 x 470 x 850 mm	2625	0,5
MIDABoost 24	1.190 x 495 x 1.275 mm	2626	0,5
MIDA.Force 7+12	1.040 x 380 x 585 mm	2631	0,5
MIDA.Force 17	1.100 x 440 x 750 mm	2624	0,5
MIDA.Black 8	990 x 360 x 605 mm	2613	0,5
MIDA.Black 11	1060 x 370 x 640 mm	2614	0,5
MIDA.Black 14+17	1.120 x 420 x 730 mm	2615	0,5
MIDA.Black 21	1.120 x 450 x 980 mm	2616	0,5
MIDA.Black 26	1.120 x 450 x 1280 mm	2617	0,5
MIDA.Quick 4+7	800 x 300 x 580 mm	2627	0,5
MIDA.Quick 10+13	1.000 x 400 x 630 mm	2628	0,5
MIDA.Quick 17	1.140 x 455 x 840 mm	2629	0,5
MIDA.Quick 21+26	1.200 x 500 x 1.300 mm	2630	0,5

POOL DEHUMIDIFIERS

Humidity can cause serious problems, if this is not controled. The ideal value is around 55 - 65 %.
More than 70 % can be seen on fogged windows and walls. This is also an excellent basic for the growth of mold and bacteria. Under 45 % leads to dry air and possible damage to the mucous membranes. With the help of our dehumidifiers you can keep a comfortable humidity of 55 - 65 %.

Advantage: high degree of heat recovery!

- for ambient temperatures of +22 °C to +35 °C
- min. 5 °C, max. 42 °C on request
- with automatic defrost available on request
- 230 V

Digital display
MIDA.Air steel or
stainless steel

DEHUMIDIFIER MIDA.Air

DRY 400, DRY 500, DRY 800

2 years manufacturer's warranty

Model	MIDA.Air DRY 400			MIDA.Air DRY 500		
Material	plastic	steel	stainless steel V4A/AISI 316	plastic	steel	stainless steel V4A/AISI 316
Pool surface	up to 45 m² ideal for small pools or spa areas			up to 60 m² ideal for medium-sized pools or spa areas		
Noise pressure level	low noise – 42 dB at a distance of 1 m			low noise – 44 dB at a distance of 1 m		
Electrical input power	700 W			1.000 W		
Heating power	1.900 W			3.500 W		
Dehumidification	max. 48 liter per day			max. 66 liter per day		
Air flow	600 m³/h			800 m³/h		
Pool Security microlight LED	compatible (optional)			compatible (optional)		
Montage housing	wall mounting (floor mounting optional with accessories)			wall mounting (floor mounting optional with accessories)		
MHousing	✓	✓ any color on request possible	✓	✓	✓ any color on request possible	✓
Regulation of humidity	mechanical	digital + temperature regulator	digital + temperature regulator	mechanical	digital + temperature regulator	digital + temperature regulator
Humidity display	–	yes + temperature	yes + temperature	–	yes	yes
Display-calibration	–	yes	yes	–	yes	yes
Accuracy	+/– 5 %	+/– 1 %	+/– 1 %	+/– 5 %	+/– 1 %	+/– 1 %
Dimensions (w x h x d)	780 x 660 x 255 mm	780 x 642 x 300 mm	780 x 642 x 300 mm	1245 x 660 x 255 mm	1.245 x 642 x 300 mm	1.245 x 642 x 300 mm
Weight	40 kg	50 kg	50 kg	60 kg	77 kg	77 kg
Code	M400 K	M400 S	M400 E	M500 K	M500 S	M500 E

MIDA.Air DRY 400, 500
stainless steel V4A/AISI 316

MIDA.Air DRY 400, 500 steel

MIDA.Air DRY 400, 500
Edelstahl V4A/AISI 316

MIDA.Air DRY 800 steel

MIDA.Air DRY 800 steel
up to 90 m² ideal for medium to large pools or spa areas
low noise – 46 dB at a distance of 1 m
1.600 W
5.100 W
max. 90 liter per day
1.200 m³/h
compatible (optional)
floor mounting (wall mounting optional with accessories)
✓
digital
yes
yes
+/– 1 %
1250 x 950 x 310 mm
100 kg
M800 S

OPTIONAL EQUIPMENT MIDA.Air

optional equipment MIDA.Air	code	Gross price €
2 m cable for all sizes	M400-E2	47,06 €

Heater

Mobile floor console

Backmounting-set (front view)

Backmounting-set (back view)

Wireless hydrostat

Illustration shows backmounting installation

MIDA.Air DRY 400

optional equipment MIDA.Air DRY 400	Housing plastic	steel	stainless steel	Code
Heater 3,5 kW / 11,9 kBtu/h, incl. magnetic valve for DRY 400 K **WITH** 230 V/5 A connection for external thermostat	✓			M400-VK
Heater 3,5 kW / 11,9 kBtu/h, incl. magnetic valve for DRY 400 S + E **WITHOUT** 230 V/5 A connection, since thermostat already included		✓	✓	M400-V
Mobile floor console with 4 wheesl for DRY 400 K, S + E	✓	✓	✓	M400-M
Backmounting-Set for DRY 400 K*	✓			M400-W
Wireless hydrostat (humidity and temperature)**	✓	✓	✓	M300
Air filter MIDA.Air DRY 400	✓	✓	✓	M400-F
Fresh air supply (adapter, Ø 100 mm, 50 mm length, galvanized)	✓	✓	✓	M301

MIDA.Air DRY 500

optional equipment MIDA.Air DRY 500	Housing plastic	steel	stainless steel	Code
Heater 5,0 kW / 17,1 kBtu/h, incl. magnetic valve for DRY 500 K **WITH** 230 V/5 A connection for external thermostat	✓			M500-VK
Heater 5,0 kW / 17,1 kBtu/h, incl. magnetic valve for DRY 500 S + E **WITHOUT** 230 V/5 A connection, since thermostat already included		✓	✓	M500-V
Mobile floor console with 4 wheesl for DRY 500 K, S + E	✓	✓	✓	M500-M
Backmounting-Set for DRY 500 K*	✓			M500-W
Wireless hydrostat (humidity and temperature)**	✓	✓	✓	M300
Air filter MIDA.Air DRY 500	✓	✓	✓	M500-F
Fresh air supply (adapter, Ø 100 mm, 50 mm length, galvanized)	✓	✓	✓	M301

MIDA.Air DRY 800

optional equipment MIDA.Air DRY 800	Housing steel	Code
Heater 7,0 kW / 23,9 kBtu/h, incl. magnetic valve for DRY 800	✓	M800-V
Wallmounting-Set for DRY 800*	✓	M800-W
Wireless hydrostat (humidity and temperature)**	✓	M300
Air filter MIDA.Air DRY 800	✓	M800-F
Fresh air supply (adapter, Ø 100 mm, 50 mm length, galvanized)	✓	M301

* max. wall thickness 400 mm ** max. range 30 m in buildings or up to 100 m without restrictions

HEAT EXCHANGERS

For a fast and flexible heating: a heat exchanger is used to transfer heat energy from one medium to another without the two media being mixed. The heat exchanger can be built into the existing house heating system. All the models can be installed and connected to the electric, firewood, pellet or oil-fired boilers, and to a heat pump and solar panel systems. The heat exchangers are designed and made of materials that permit their use for a wide variety of needs and in many different types of installations.

INSTALLATION SCHEME OF HEAT EXCHANGER HI-TEMP

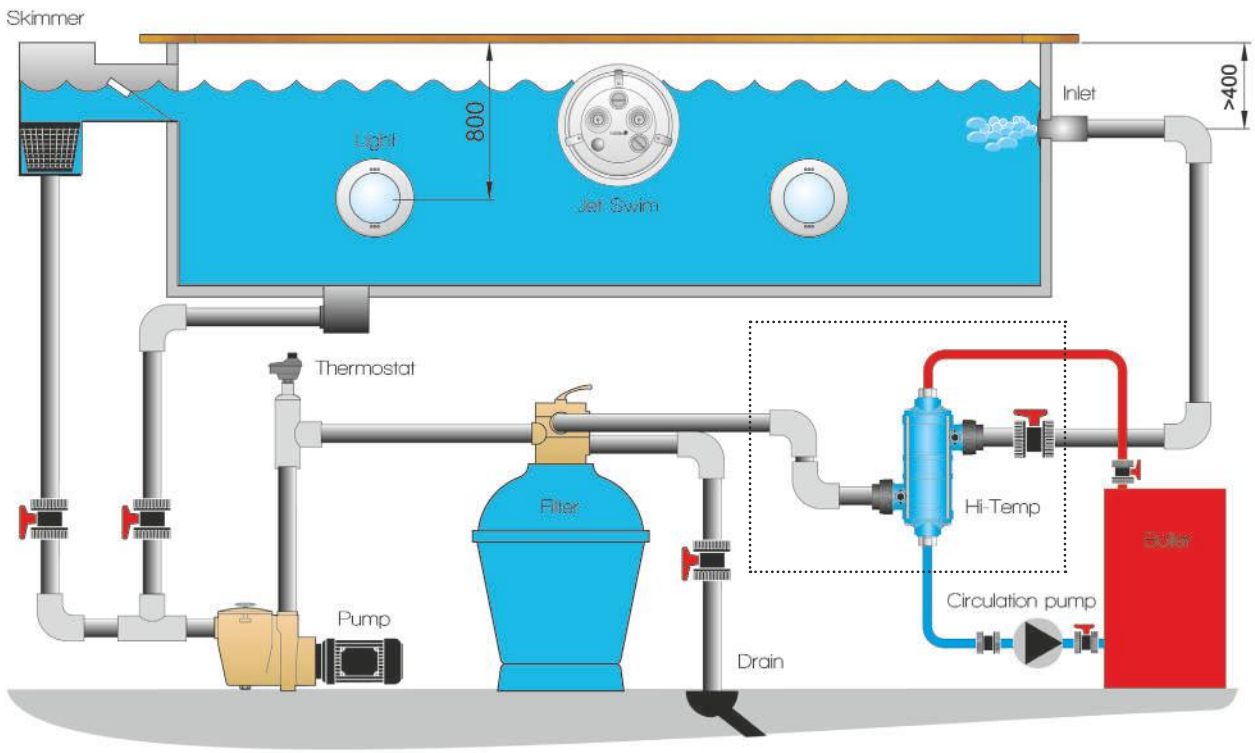

ELECTRIC HEATERS – SIMPLE AND EFFECTIVE

Electric heaters heats the water easily and effectively. An electric heater is easy to connect to the existing electrical power-mains and provides full power round the clock. The water from the swimming pool's circulation flows through the heater and is heated by the heating element. The heaters are compact and can beinstalled in all types of pool or spas. All electric heaters are designed for continuous flow with the lowest possible pressure drop.

ELECTRIC HEATER

Electric heater to heat swimmingpools or whirlpools.
It is easily and simply connected to the water circuit with the gluing socket d 50 mm.
Perfect for permanent and mobile facilities.
Pressure switch for low water protection and highly corrosion proof heating elements in Incoloy 825, are very cost-effective without limiting fuctionality and quality.

- max. pressure: 3 bar
- control thermostat 0-40°C
- safety thermostat 55°C
- Mounting direction horizontal and vertical

Version in titanium on request.

1 year manufacturer's warranty

Including brackets

Model	A (mm)	B	C (mm)	D (mm)	E (mm)	F (mm)
3 kW / 10,2 kBtu/h	293	adhesive sleeve d 50 mm	345	475	110	225
6 kW / 20,5 kBtu/h	363	adhesive sleeve d 50 mm	415	545	110	225
9 kW / 30,7 kBtu/h	363	adhesive sleeve d 50 mm	415	545	110	230
12 kW / 40,9 kBtu/h	453	adhesive sleeve d 50 mm	505	635	110	230
15 kW / 51,2 kBtu/h	553	adhesive sleeve d 50 mm	605	735	110	240
18 kW / 61,4 kBtu/h	653	adhesive sleeve d 50 mm	705	835	110	240

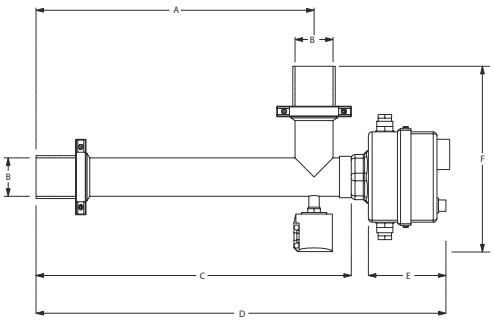

Heat performance	Ampere 400 V	Code	kg
3 kW / 10,2 kBtu/h	4,3	9EWT-3	2,5
6 kW / 20,5 kBtu/h	8,7	9EWT-6	3,0
9 kW / 30,7 kBtu/h	13,0	9EWT-9	3,0
12 kW / 40,9 kBtu/h	17,3	9EWT-12	3,5
15 kW / 51,2 kBtu/h	21,7	9EWT-15	4,5
18 kW / 61,4 kBtu/h	26,0	9EWT-18	4,5

COMPACT ELECTRIC HEATER 400 V
PLASTIC & INCOLOY

Electric heater made of thermoplastic for extra strength.
Heating element made of Incoloy 825.
Supplied with a thermostat for adjusting pool temperature as well as overheating cut out and flow switch.
Minimum flow 90 l/min. Max. pressure: 2.5 bar.
Suitable for private pools up to 100 m³.

- housing of thermoplastic
- capacity 3 – 18 kW
- electric heater made of fiberglass reinforced thermoplastic
- horizontal installation, eliminates air pockets and damage to the electric heating element
- heating elements of Incoloy 825
- equipped with overheating cutout and flow switch
- supplied with rigid mountings
- union couplings for Ø 50 mm pipes
- Mounting direction horizontal and vertical

Including brackets

2 years manufacturer's warranty

Version in titanium on request.

Length mm	Performance kW	kBtu/h	Ampere 400 V	Code	kg
358	3	10,2	5	901	1,7
358	6	20,5	9	902	1,7
540	9	30,7	14	903	1,7
540	12	40,9	18	904	2,1
540	15	51,2	22	905	2,1
540	18	61,4	27	906	2,1

ELECTRIC HEATER 400 V COMPACT MODEL

Housing casing made of acid-resistant stainless steel AISI 316L with heating element of Incoloy 825, Pressure switch as low water protection 230/400 V, overheat thermostat and thermostat 0-45 °C, 1 1/2" internal thread. Minimum flow 85 l/min. Max. pressure: 4 bar.
Suitable for private pools up to 100 m³

Including brackets

2 years manufacturer's warranty

- housing of stainless steel AISI 316L
- capacity 3 – 18 kW
- electric heater made of fiberglass reinforced thermoplastic
- horizontal installation, eliminates air pockets and damage to the electric heating element
- heating elements of Incoloy 825
- equipped with overheating cutout and flow switch
- supplied with rigid mountings
- union couplings for Ø 50 mm pipes
- Mounting direction horizontal and vertical

Version in titanium on request.

Length mm	Performance kW	kBtu/h	Ampere 400 V	Code	kg
452,5	3	10,2	5	930-DS	2,8
452,5	6	20,5	9	931-DS	2,8
552,5	9	30,7	14	932-DS	3,2
552,5	12	40,9	18	933-DS	3,2
552,5	15	51,2	22	934-DS	3,2
552,5	18	61,4	27	935-DS	3,2

04

FILTERS & PUMPS

The filter system is the heart of every swimming pool. The water should circulate each day two to three times and the filter system should fit to the pool size. A variety of filters, pumps and filter media offers the right solution for every pool.
Alternatively, there are filter systems-sets in different sizes and performance levels available.

OVERVIEW

76	MIDA.Carbon Premium GRP Filter
77	MIDA.Carbon GRP Filter
78	MIDA.Split Filter
79	Fiberglass Commercial Sand Filter
81	MIDA.Bobbin Wound Side Mounted Filter
82	Filter Media
83	Self Priming Filter Pumps
87	Bronze Pumps
89	Jet Swim Units, Hugo Lahme Taifun Duo

MIDA.Carbon Premium GRP filter container

- Filter container with 400 mm transparent cover and 300 mm opening at the top for quick change of the filte medium
- Made of glass fiber reinforced plastic (GRP) in high quality
- With UV-resistant gel coat
- Includes 1½ „6-way valve (# 310-3TSB, side mount, Color: black), unmounted[1]
- Incl. Pressure gauge up to 4 bar, ¼ „and 1/8" reduction made of nickel-plated brass
- Including bleed screw and large 1¼ „drain valve
- Grain of quartz sand: 0.4-0.8 mm; Grain filter glass: 0.5-1.0 mm (Filter media not included)
- 5 year warranty on the filter container
- Built-in parts made of PP, ABS and PVC
- All screws are made of stainless steel V2A and the nuts made of high-strength corrosion-resistant and nickel plated brass
- Distribution system: Filter star (0.3 mm filter finger opening)
- Distance between connections: 125 mm
- Color: RAL 9001 creamy white
- Filter base made of reinforced plastic
- Filter palette: optional
- Test pressure 3.75 bar
- Max. Operating temperature + 42 ° C

NEW

INKLUSIVE 6-way-valve and piping[1]

Waranty 5 YEARS on filter tank

CONNECTIONS suitable for BESGO rod valve

Konform zur DIN EN 16713

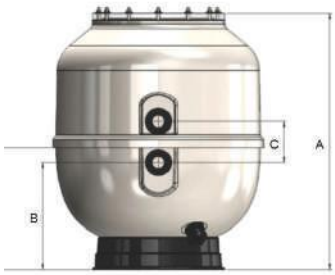

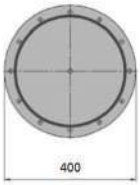

from 32 pieces own color available on request

A	B	C	Code
687 mm	285 mm	125 mm	715
777 mm	325 mm	125 mm	716

TOP long lasting antibacterial silver internal coating

Diameter	Total height	Max. pool volume	Connections in – out	Filter area	Quantity Glass 0.5– 1 mm (grade 1)	Quantity Sand 0.4-0.8 mm (grade 1)	Pressure work	max.	Flow rate at 30 – 50 m³/h/m²	Weight	Code
500 mm	755 mm	65 m³	DN 40/D 50	0,20 m²	80 kg	100 kg	1,5 bar	2,5 bar	6 – 10 m³	20 kg	715
600 mm	860 mm	85 m³	DN 40/D 50	0,28 m²	140 kg	175 kg	1,5 bar	2,5 bar	8 – 14 m³	24 kg	716

OPTIONAL ACCESSORIES: Base plates

Base plate	suitable for	Code
750 x 500 x 35 mm	MIDA.Carbon Premium 500 und 600	FP-750

[1] Delivery in individual parts (not glued, glue and cleaner are not included)

MIDA.Carbon GRP filter container

- Filter container with 300mm transparent lid and 200 mm filling opening at the top
- Made of glass fiber reinforced plastic (GRP) in high quality
- With UV-resistant gel coat
- Includes 1½ „6-way valve (# 310-3TSB, side mount, Color: black), for 500 + 600 mm, unassembled[1]
- includes 2 „6-way valve (# 320-3TSB, side mount, Color: black), for 750 + 900 mm, unmounted[1]
- Incl. Pressure gauge up to 4 bar, ¼ „and 1/8" reduction made of nickel-plated brass
- including bleed screw and large 1¼ „drain valve
- Grain of quartz sand: 0.4-0.8 mm; Grain filter glass: 0.5-1.0 mm (Filter media not included)
- 5 year warranty on the filter container
- Built-in parts made of PP, ABS and PVC
- All screws are made of stainless steel V2A and the nuts made of high-strength corrosion-resistant and nickel plated brass
- Distribution system: Filter star (0.3 mm filter finger opening)
- Distance between connections: 125 mm at 500 + 600 mm 230 mm at 750 + 900 mm
- Color: RAL 9001 creamy white
- Filter base made of reinforced plastic
- Filter palette: optional
- Test pressure 3.75 bar
- Max. Operating temperature + 42 ° C
- Operating pressure: nominal: 1.5 bar, max: 2.5 bar

INKLUSIVE 6-way-valve and piping[1]

CONNECTIONS suitable for BESGO rod valve

Waranty 5 YEARS on filter tank

Konform zur DIN EN 16713

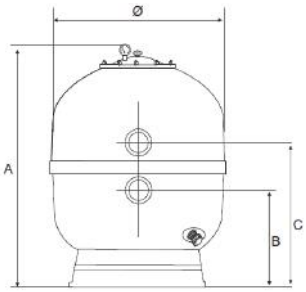

from 32 pieces own color available on request

A	B	C	Code
690 mm	285 mm	410 mm	718
777 mm	335 mm	460 mm	719
875 mm	320 mm	550 mm	720
980 mm	350 mm	580 mm	721

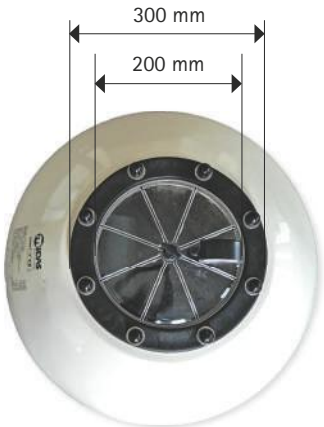

Diameter	Total height	Max. pool volume	Connections in – out	Filter area	Quantity Glass 0.5– 1 mm (grade 1)	Quantity Sand 0.4–0.8 mm (grade 1)	Pressure work	max.	Flow rate at 30 – 50 m³/h/m²	Weight	Code
500 mm	690 mm	65 m³	DN 40/D 50	0,20 m²	80 kg	100 kg	1,5 bar	2,5 bar	6 – 10 m³	18 kg	718
600 mm	770 mm	85 m³	DN 40/D 50	0,28 m²	140 kg	175 kg	1,5 bar	2,5 bar	8 – 14 m³	22 kg	719
750 mm	875 mm	110 m³	DN 50/D 63	0,44 m²	240 kg	300 kg	1,5 bar	2,5 bar	13 – 22 m³	30 kg	720
900 mm	990 mm	140 m³	DN 50/D 63	0,64 m²	400 kg	500 kg	1,5 bar	2,5 bar	19 – 32 m³	48 kg	721

OPTIONAL ACCESSORIES: Base plates

Base plate	suitable for	Code
750 x 500 x 35 mm	MIDA.Carbon 500 and 600 (2 pieces are needed for the assembly)	FP-750

[1] Delivery in individual parts (not glued, glue and cleaner are not included)

MIDA.Split Filterbehälter

INKLUSIVE
6-way-valve
and piping[1]

Waranty
5 YEARS
on filter tank

Made in Germany

- High quality filter made of fiberglass-reinforced polypropylene
- shared execution
- UV protection against fading
- including black stainless steel clamping ring for service-friendly opening
- incl. manometer 1/4 „up to 3.0 bar (at 400 mm), incl. manometer 3/8" to 2,5 bar (at 500 + 600 mm)
- including MIDAS 1 1/2 „6-way valve (# 310-3TSB) side-mount, color: black), unmounted[1]
- including bleed screw and 1/4 „drain valve (at 400 mm), incl. bleed screw and 3/8" drain valve (at 500 + 600 mm)
- Grain quartz sand: 0,4–0,8 mm; Specification Filter glass: 0,5–1,0 mm (Filter media not included)
- All screws are made of stainless steel V2A
- Distribution system: Filter star
- Distance between connections: 102 mm
- Color RAL 5024 pastel blue
- Filter palette: optional
- Connections: DN 40/D 50

Dia-meter	Total height	Max. pool volume	Connections in – out	Filter area	Quantity Glass 0.5– 1 mm (grade 1)	Quantity Sand 0.4–0.8 mm (grade 1)	Pressure work	max.	Flow rate at 30 – 50 $m^3/h/m^2$	Weight	Code
400 mm	725 mm	40 m^3	DN 40/D 50	0,126 m^2	40 kg	50 kg	1,4 bar	1,7 bar	4 – 6 m^3	8,7 kg	751
500 mm	830 mm	65 m^3	DN 40/D 50	0,196 m^2	70 kg	90 kg	1,4 bar	1,8 bar	6 – 10 m^3	14,0 kg	753
600 mm	1080 mm	90 m^3	DN 40/D 50	0,283 m^2	96 kg	120 kg	1,4 bar	1,8 bar	8 – 14 m^3	21,2 kg	755

OPTIONAL ACCESSORIES: Base plates

Base plate	suitable for	Code
750 x 500 x 35 mm	MIDA.Split 400,500 and 600	FP-750

[1] Delivery in individual parts (not glued, glue and cleaner are not included)

FIBERGLASS COMMERCIAL SAND FILTERS

- fiberglass wound tank, UV and corrosion resistant.
- manual air release valve and air tube enables easy release of trapped air during operation and testing.
- sight glass and manhole are available optionally.
- filter finger for maximum hydraulic performance.
- nozzle plate system ensures uniform flow for both filtering and backwashing, ensuring maximum performance through the media bed. Save up to 25% of backwash water.
- maximum working pressure: 250 kpa / 36 psi / 2.5 bar or 400 kpa / 58 psi / 4.0 bar.
- factory testing pressure: 400 kpa / 58 psi / 4.0 bar or 600 kpa / 86 psi / 6.0 bar
- size of quartz sand: 0.4 – 0.8 mm
- size of filter glass: 1.0 – 3.0 mm

Cover Lid

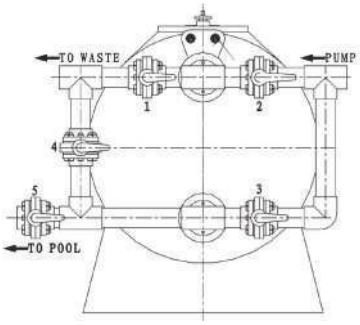

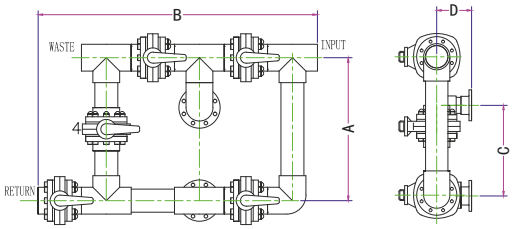

	1	2	3	4	5
Filter	close	open	close	close	open
Back wash	open	close	open	close	close
Rinse	close	open	close	open	close

Model	A	B	C	D	Ø diameter	Gross price €
K120	545 mm	1200 mm	340mm	173 mm	90 mm	
K140	596 mm	1400 mm	350 mm	207 mm	110 mm	
K160	696 mm	1400 mm	450 mm	207 mm	110 mm	
K180 K200	900 mm	1945 mm	550 mm	287 mm	160 mm	
K230 K250	1036 mm	1385 mm	600 mm	351 mm	200 mm	

FILTER FINGER

Diameter	Connections in – out	Filter area	Quantity Sand 0,5 – 1 mm (grade 1)	Quantity Sand 0,7 – 1,2 mm (grade 2)	Max. Pressure	Flow rate at 30 – 50 $m^3/h/m^2$	Code
1200 mm	90 mm	1.13 m^2	750 kg	300 kg	2,5 bar	34 – 57 m^3	K120
1400 mm	110 mm	1.54 m^2	1200 kg	500 kg	2,5 bar	46 – 77 m^3	K140
1600 mm	110 mm	2.01 m^2	1850 kg	750 kg	2,5 bar	60 – 100 m^3	K160
1800 mm	160 mm	2.54 m^2	2500 kg	750 kg	2,5 bar	76 – 127 m^3	K180
2000 mm	160 mm	3.14 m^2	3300 kg	1150 kg	2,5 bar	94 – 157 m^3	K200
2300 mm	200 mm	4.15 m^2	4900 kg	1600 kg	2,5 bar	125 – 208 m^3	K230
2500 mm	200 mm	4.90 m^2	6000 kg	2200 kg	2,5 bar	147 – 245 m^3	K250
3000 mm	200 mm	7.07 m^2	8600 kg	3300 kg	2,5 bar	212 – 353 m^3	K300

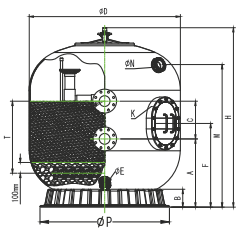

Model	Ø D (mm)	H (mm)	A (mm)	C (mm)	F (mm)	M (mm)	T (mm)	K (mm)	Ø N (mm)	Ø E (mm)	Ø P (mm)	B (mm)
K120	1200	1400	560	340	740	1050	600	180x180	75	60	1010	180
K140	1400	1600	650	350	800	1250	700	300x400	75	60	1215	165
K160	1600	1750	680	450	870	1450	800	300x400	75	60	1415	215
K180	1800	1950	730	550	910	1650	850	300x400	75	60	1610	215
K200	2000	2140	800	550	1050	1700	900	300x400	75	60	1800	240
K230	2300	2350	940	600	1070	1800	1000	300x400	75	60	2010	240
K250	2500	2400	960	600	1100	1900	1050	300x400	75	60	2010	240
K300	3000	2650	1020	600	1130	2150	1100	300x400	75	60	2650	350

LATERAL AND NOZZLE

The nozzle plate system also allows the introduction of pressurised air directly into the bottom of the filter media. Uniform introduction of air and water through the nozzle plate provides vigorous agitation and filter media bed expansion required for and effective air/water backwash leading to reduced backwashing times and reduced volumes of water.

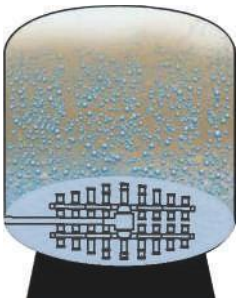

Filter fingers

Nozzle Plate

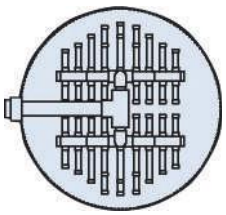

Filter fingers

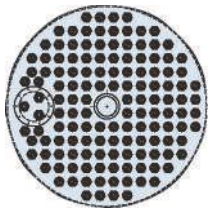

Nozzle

NOZZLE

Filter diameter	Connections in – out	Filter area	Quantity Sand 0,5 – 1 mm (grade 1)	Quantity Sand 0,7 – 1,2 mm (grade 2)	Max. Pressure	Flow rate at 30 – 50 $m^3/h/m^2$	Weight	Code
1400 mm	110 mm	1.54 m^2	1800 kg	220 kg	2,5 bar	46 – 77 m^3		N140
1600 mm	110 mm	2.01 m^2	2300 kg	300 kg	2,5 bar	60 – 100 m^3		N160
1800 mm	160 mm	2.54 m^2	2900 kg	360 kg	2,5 bar	76 – 127 m^3		N180
2000 mm	160 mm	3.14 m^2	3600 kg	440 kg	2,5 bar	94 – 157 m^3		N200
2300 mm	200 mm	4.15 m^2	4800 kg	580 kg	2,5 bar	125 – 208 m^3		N230
2500 mm	200 mm	4.90 m^2	5700 kg	680 kg	2,5 bar	147 – 245 m^3		N250

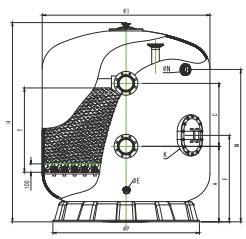

Model	Ø D (mm)	H (mm)	A (mm)	C (mm)	F (mm)	M (mm)	T (mm)	W (mm)	K (mm)	Ø N (mm)	Ø E (mm)	Ø P (mm)	B (mm)
N140	1410	1900	700	550	850	1400	1000	300	300x400	75	40	1215	165
N160	1620	2000	810	550	900	1500	1000	320	300x400	75	40	1450	215
N180	1830	2100	850	550	980	1600	1000	320	300x400	75	40	1610	215
N200	2030	2200	900	550	1030	1650	1000	350	300x400	75	40	1800	240
N230	2300	2350	940	600	1070	1800	1000	400	300x400	75	40	2010	240
N250	2500	2400	960	600	1100	1900	1000	400	300x400	75	40	2010	240

OPTIONAL EQUIPMENT (SET)

Model	Available for Filter Code	Code	Gross price €
Manhole and Sightglass	K120	K12-E1	
Manhole and Sightglass	from K140/N140 – K300/N250	K14-E1	

Manhole

Sightglass

MIDA.BOBBIN SIDE MOUNTED FILTER incl. 6-WAY-VALVE, PIPING, MANHOLE and FILTER ARM

Polyester filter reinforced with fiberglass, with filger fingers, internal tubing, drain valve with a reduction to a hose, pressure gauge with de-aeration, 6-way valve.
Operating temperature: 40 C, color: green.

- maximum-working pressure: 250 kpa/36 psi/2.5 bar
- factory testing pressure: 400 kpa/58 psi/4.0 bar
- maximum temperature: 50 °C
- size of quartz sand: 0,4 – 0.8 mm
- size of filter glass: 0.5 – 1.0 mm
- delivery not mounted

KS450 – KS900

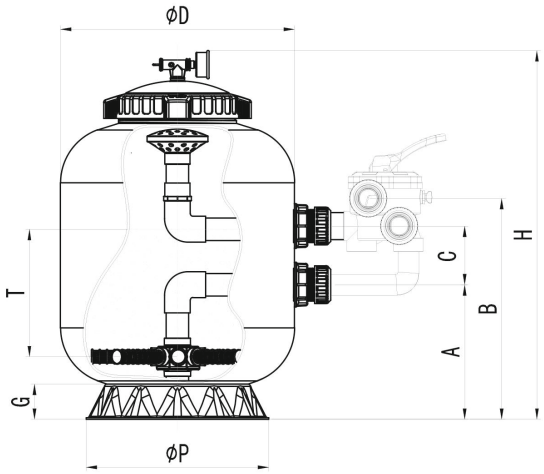

KS1000 – KS1200

Incl. 6-way-valve and piping[1]

Model	Diameter	Connections in – out	Filter area	Quantity Glass 0,5–1 mm (grade 1)	Quantity Sand 0,4–0,8 mm (grade 1)	Max. Pressure	Flow rate at 30 – 50 $m^3/h/m^2$	Valve	Opening size	Weight	Code
KS450	450 mm	DN 40/D 50	0,16 m^2	40 kg	50 kg	2,5 bar	5 – 8 m^3/h	1½"	Ø 200 mm	14 kg	KS450
KS500	500 mm	DN 40/D 50	0,20 m^2	72 kg	90 kg	2,5 bar	6 – 10 m^3/h	1½"	Ø 242 mm	17 kg	KS500
KS650	630 mm	DN 40/D 50	0,32 m^2	120 kg	150 kg	2,5 bar	9 – 16 m^3/h	1½"	Ø 242 mm	22 kg	KS650
KS700	700 mm	DN 40/D 50	0,38 m^2	168 kg	210 kg	2,5 bar	12 – 19 m^3/h	1½"	Ø 242 mm	28 kg	KS700
KS750	750 mm	DN 50/D 63	0,44 m^2	204 kg	255 kg	2,5 bar	13 – 22 m^3/h	2"	Ø 242 mm	37 kg	KS750
KS800	800 mm	DN 50/D 63	0,50 m^2	259 kg	320 kg	2,5 bar	15 – 25 m^3/h	2"	Ø 242 mm	43 kg	KS800
KS900	900 mm	DN 50/D 63	0,64 m^2	392 kg	490 kg	2,5 bar	19 – 32 m^3/h	2"	Ø 242 mm	51 kg	KS900
KS1000	1000 mm	DN 50/D 63	0,79 m^2	480 kg	600 kg	2,5 bar	24 – 39 m^3/h	2"	375 x 275 mm	66 kg	KS1000
KS1100	1100 mm	DN 50/D 63	0,95 m^2	640 kg	800 kg	2,5 bar	28 – 47 m^3/h	2"	375 x 275 mm	72 kg	KS1100
KS1200	1200 mm	DN 50/D 63	1,13 m^2	760 kg	950 kg	2,5 bar	34 – 57 m^3/h	2"	375 x 275 mm	81 kg	KS1200

Model	kg	D (mm)	H (mm)	A (mm)	C (mm)	B (mm)	T (mm)	G (mm)	P (mm)
KS450	12	450	660	260	125	445	250	75	390
KS500	14	500	730	280	125	464	280	75	390
KS650	19	630	790	310	125	494	300	95	565
KS700	23	700	850	360	125	544	350	95	565
KS750	31	750	980	385	220	680	400	95	565
KS800	35	800	1010	385	220	680	420	150	790
KS900	41	900	1110	430	220	725	480	150	790
KS1000	64	1000	1160	460	220	755	510	150	790
KS1100	70	1100	1260	540	220	835	560	180	1010
KS1200	78	1200	1340	540	220	835	600	180	1010

[1] not glued

FILTER MEDIA

FILTER GLASS

Glass is a environmentally friendly, a cost effective and a great alternative filter media to quartz sand. The Filtration Media is made from recycled glass, so it doesn't involve intrusive mining and the use of eimited resources. The glass is less dense than sand, requiring
20 % less media to fill the equivalent filter. Glass removes up to 30 % more pollutants than sand.

- 100 % recycling glass for crystal clear water
- sub-angular, dried
- more efficient to use
- sustainable and environmently friendly
- good backwashing, removal of dirt
- require less maintenance compared to sand
- pallet contains 50 bags à 20 kg
- delivery full pallets only

grade 1

grade 2

grade 3

Filter material	Grain size (mm)	Weight	Code
filter glass grade 1	0,5 - 1,0	20 kg	791
filter glass grade 2	1,0 - 3,0	20 kg	792
filter glass grade 3	3,0 - 6,0	20 kg	793

QUARTZ SAND

- standard filter medium
- corresponding to DIN 4924 (fountain construction) / EN12904 (drinking water treatment)
- washed several times, sieved and dried
- no sharp edges
- particle density 2,7 g/cm^3
- free of organic impurities
- pallet contains 40 bags à 25 kg
- delivery full pallets only

Made in Germany

Filter material	Grain size (mm)	bulk density	Weight	Code
quartz sand grade 1	0,4 - 0,8	1,4 g/cm^3	25 kg	780
quartz sand grade 2	0,7 - 1,2	1,4 g/cm^3	25 kg	785
quartz sand grade 3	2,0 - 3,2	1,4 g/cm^3	25 kg	781
quartz sand grade 4	3,2 - 5,6	1,5 g/cm^3	25 kg	782

SELF PRIMING FILTER PUMPS

VARIABLE SPEED FILTER PUMP, SELF PRIMING

SPECK BADU DELTA ECO VS

Permanent magnet motor, LED in transparent cover. Adjustable speeds of 1,000 - 3,000 rpm (in increments of 10), for pools with a volume up to 30-150 m³. Erectable max. 3 m above or below the water level, with integrated fiber catcher (content approx. 4 l), can be used for swimming pool water with a salt concentration of up to 0.5 % (equivalent to 5 g/l).
Protection class IP55.
Info button on the LED display for current consumption in kW.
There is no contact between motor or pump shaft and circulating water.
Electrical separation. Supplied with 3 m connection cable.
Noise level 40.0 - 69.9 dB at 1 m distance.
Note: Time control external via potential-free contacts.
Use in salt electrolysis: possible (up to 0.5 %)
Use in sea water: impossible

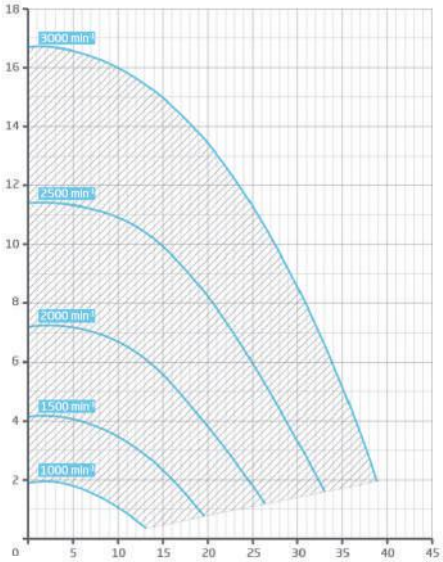

Made in Germany

Photo: Speck Pumpen

Type	Voltage	Power input kW	Power input HP	Power output kW	Power output HP	Pump capacity*	Connection suction side	Connection pressure side	kg	Article
BADU Delta Eco VS	230 V / 50 Hz	0,08–1,4	1,1–1,9	1,10	1,50	31 m³/h	63 mm glue	63 mm glue	14,0	DEECO

*pump power at 8 m/wh

SELF PRIMING FILTER PUMP SPECK BADU DELTA

NEW

This pump features a maintenance-free motor with high-performance ball bearings and stainless steel motor shaft.
It is very quiet and efficient because it has been redesigned hydraulically.
A LED lighting with transparent cover for easy visual inspection. Internal drain plugs avoid the risk of breakage and high-efficiency technology leads to higher flow rates with lower energy consumption.

For pools with volumes up to 150 m³. Erectable above and below the water level max. 3m, with integrated fiber catcher (content approx. 4 l), can be used up to a salt concentration of 0.5%.
Bellows mechanical seal on Plastic running hub mounted.
There is no contact between motor or pump shaft and circulating water.
Electrical separation. Protection class IP55.
Delivery without connection cable.
Salt electrolysis suitable: yes (up to 0.5%)
Use in sea water: possible when using the Delta MK

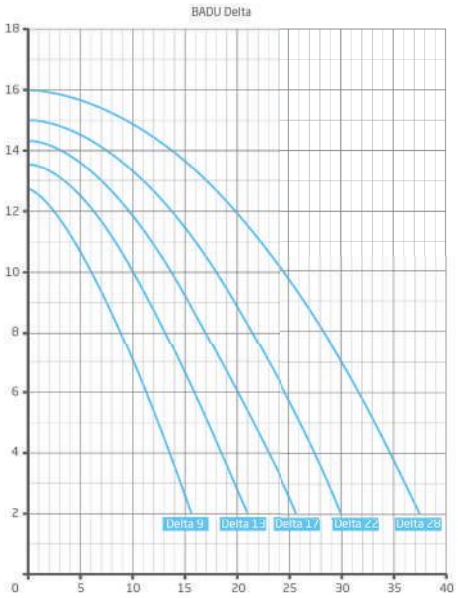

Made in Germany

Foto: Speck Pumpen

Typ	Voltage	Power input P1	Power output P2	Pump capacity*	Connection suction side	Connection pressure side	kg	Article
BADU Delta 9	230 V	0,50 kW	0,30 kW	9 m³/h	50 mm	50 mm	12,8	DE09
BADU Delta 13	230 V	0,69 kW	0,45 kW	13 m³/h	63 mm	63 mm	12,8	DE13
BADU Delta 17	230 V	0,87 kW	0,55 kW	17 m³/h	63 mm	63 mm	14,2	DE17
BADU Delta 22	230 V	1,10 kW	0,75 kW	21 m³/h	63 mm	63 mm	15,6	DE22
BADU Delta 28	230 V	1,40 kW	1,00 kW	28 m³/h	63 mm	63 mm	19,0	DE28

* Specify pump capacity at 8 m / Ws

SPECK BADU ECO LOGIC

NEW

Automatic timer with speed pump control, e.g. for BADU Delta ECO VS, Prime ECO VS and Alpha ECO Soft.
The controller has a clearly understandable full-text display for convenient operation and a multilingual menu (D, GB, F, NL), which is clear and structured. This allows fast programming and evaluation of operating hours.
The control unit is equipped for individual programming with three switching programs per day.
The pumps are controlled by speed tap contacts and with a control voltage of 0-10 V.
An integrated auxiliary relay allows programming, e.g. for lighting the pool or controlling a heat pump.

Foto: Speck Pumpen

Typ	Voltage	Dimension	Protection	kg	Article	Gross price €
BADU Eco Logic	230 V	163 x 110 x 52 mm	IP44	1,8	ECOLO	710,08 €

SELF-PRIMING FILTER PUMP
MIDA.Gamma

For max. 120 m³ pools. Circulation of swimming pool water through a filter system. Salt concentration up to 0,5 %. Installation up to 3 m above or below water level. Single-stage centrifugal pump with integrated pre-filter.
Use in salt electrolysis: on request.
Use in sea water: impossible.

Electrical self priming pump for pools with large pre-filter, which, together with its excellent hydraulic performance, gives a very large filtering capacity.
A filter with a transparent, polycarbonate lid that easily allows inspection of the interior of the pre-filter sieve. No possible electrical contact with the water as no part of the motor is open to it. Includes a standard key for effortless opening of the pre-filter lid.

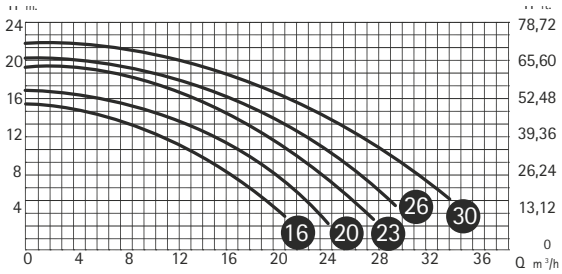

Type	Voltage	Power output kW	HP	Pump capacity*	Connections (suction and pressure side)	kg	Code
MIDA.Gamma 16	230 V / 50 Hz	0,55	0,75	15,7 m³/h	63 mm PVC / 2" internal thread	11,9	Gamma 16
MIDA.Gamma 20	230 V / 50 Hz	0,75	1,00	19,7 m³/h	63 mm PVC / 2" internal thread	13,1	Gamma 20
MIDA.Gamma 23	230 V / 50 Hz	1,10	1,50	23,0 m³/h	63 mm PVC / 2" internal thread	15,5	Gamma 23
MIDA.Gamma 26	230 V / 50 Hz	1,50	2,00	26,0 m³/h	63 mm PVC / 2" internal thread	17,1	Gamma 26
MIDA.Gamma 30	230 V / 50 Hz	2,20	3,00	30,0 m³/h	63 mm PVC / 2" internal thread	21,0	Gamma 30

*pump power at 8 m/wh

SELF-PRIMING FILTER PUMP
MIDA.Alpha

For max. 60 m³ pools. Circulation of swimming pool water through a filter system. Salt concentration up to 0,5 %. Installation up to 3 m above or below water level. Single-stage centrifugal pump with integrated pre-filter.
Use in salt electrolysis: on request.
Use in sea water: impossible.

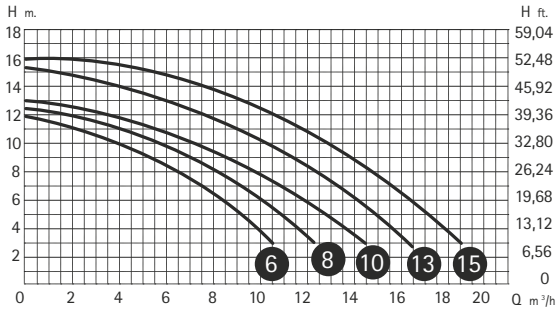

Electrical self priming pump for pools with large pre-filter, which, together with its excellent hydraulic performance, gives a very large filtering capacity.
A filter with a transparent, polycarbonate lid that easily allows inspection of the interior of the pre-filter sieve. No possible electrical contact with the water as no part of the motor is in open to it.

Type	Voltage	Power output kW	Power output HP	Pump capacity*	Connections (suction and pressure side)	kg	Code
MIDA.Alpha 6	230 V / 50 Hz	0,16	0,25	6,0 m³/h	50 mm PVC / 1½" internal thread	8,5	Alpha 6
MIDA.Alpha 8	230 V / 50 Hz	0,25	0,33	8,0 m³/h	50 mm PVC / 1½" internal thread	8,5	Alpha 8
MIDA.Alpha 10	230 V / 50 Hz	0,37	0,50	10,0 m³/h	50 mm PVC / 1½" internal thread	8,5	Alpha 10
MIDA.Alpha 13	230 V / 50 Hz	0,55	0,75	12,5 m³/h	50 mm PVC / 1½" internal thread	9,9	Alpha 13
MIDA.Alpha 15	230 V / 50 Hz	0,75	1,00	15,3 m³/h	50 mm PVC / 1½" internal thread	9,9	Alpha 15

*pump power at 8 m/wh

SELF-PRIMING FILTER PUMP
MIDA.Pombi

For max. 60 m³ pools, made of plastic, with integrated pre-filter, for the circulation of swimming pool water, Connenction 1½" internal thread with hose fittings 32/38 mm, 230 V
Use in salt electrolysis: possible
Use in sea water: impossible

Type	Voltage	Power input kW	Power input HP	Power output kW	Power output HP	Pump capacity*	Connection on suction and on pressure side	kg	Code
MIDA.Pombi 4	230 V 50 Hz	0,29	0,38	0,20	0,26	7 m³/h	1½" internal thread on both sides with hose nozzles 32/38 mm	5,9	22737
MIDA.Pombi 6	230 V 50 Hz	0,41	0,54	0,30	0,40	11 m³/h	1½" internal thread on both sides with hose nozzles 32/38 mm	9,0	22738
MIDA.Pombi 8	230 V 50 Hz	0,49	0,65	0,35	0,46	13 m³/h	1½" internal thread on both sides with hose nozzles 32/38 mm	9,9	22739
MIDA.Pombi 10	230 V 50 Hz	0,86	1,14	0,60	0,80	14,5 m³/h	1½" internal thread on both sides with hose nozzles 32/38 mm	10,9	22740

*pump power at 8 m/wh

BRONZE PUMPS WITH PRE-FILTER

Pahlén's self-manufactured centrifugal pumps are specially designed for swimming pools where high demands are made on capacity, steady and quiet operation and long service without breaks.
All Pahlén pumps are equipped with a drain plug for convenient emptying of water, for instance when emptying the pool for the winter.

Features
- pump housing and pump impeller made of bronze
- pump shaft made of acid proof stainless steel
- high-quality motors
- equipped with drain plug
- third-party tested and certified
- 2" internal thread

POOL PUMP 0,75 kW – 1,5 kW

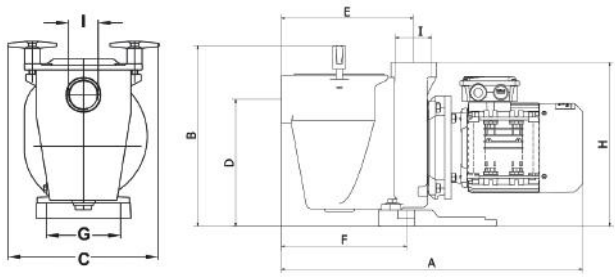

Code	Pump capacity m³/h*	Power output kW	HP	Voltage	kg
120210	16,2	0,75	1,0	230	23,5
120110	16,2	0,75	1,0	230/400	23,5
120215	20,7	1,1	1,5	230	26,8
120115	20,7	1,1	1,5	230/400	26,8
120220	26,4	1,5	2,0	230	28,0
120120	26,4	1,5	2,0	230/400	28,0

*pump power at 8 m/wh

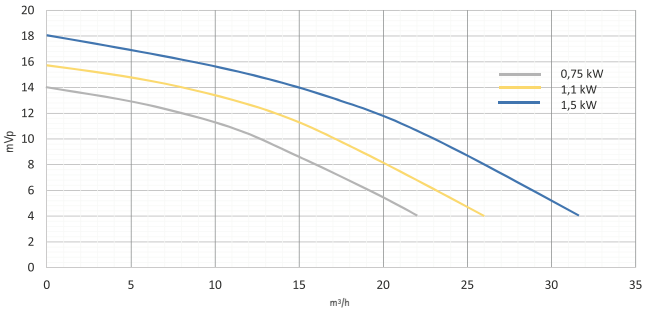

Dimensions (mm)

Item no.	A	B	C	D	E	F	G	H	I
120210, 120110	484	285	245	210	202	160	126,5	255	2"
120215, 120115	502	285	245	210	202	160	126,5	255	2"
120220, 120120	521	285	245	210	202	160	126,5	255	2"

POOL PUMP 1,5 kW – 4,0 kW

3" internal thread on suction side and 2½" internal thread on pressure side

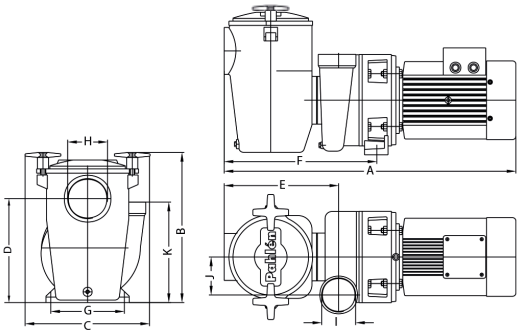

Code	Pump capacity m³/h*	Power output kW	HP	Voltage	kg
112201	34,8	1,5	2,0	230/400	35,8
112211	51,6	2,2	3,0	230/400	37,8
112221	80,7	4,0	5,4	400/690	45,8

*pump power at 8 m/wh

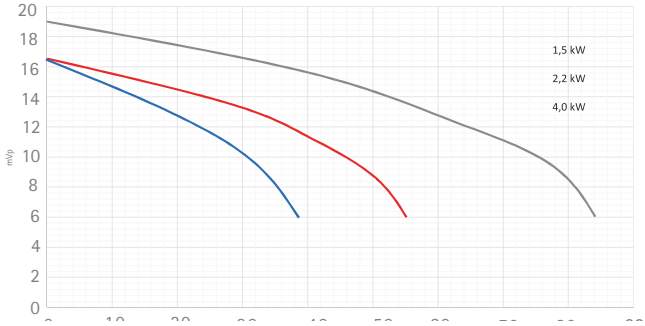

Dimensions (mm)

Item no.	A	B	C	D	E	F	G	H	I	J	K
112201, 112211	620	335	275	225	250	330	130	3"	2½"	82	220
112221	710	335	275	225	250	330	130	3"	2½"	82	220

BRONZE PUMPS WITHOUT PRE-FILTER

For various purposes where the only requirement is flowing water.
Suitable for i.e. spas, circulation, solar heating, fountains and waterfalls.

POOL PUMP 0,37 kW – 1,1 kW

Code	Pump capacity m³/h*	Power output kW	HP	Voltage	kg
11424	6,3	0,37	0,5	230	13.0
11425	12,9	0,55	0,75	230	13.0
11426	16,2	0,75	1,0	230	14.0
11418	16,2	0,75	1,0	230/400	16.9
11427	20,7	1,1	1,5	230	21.4
11419	20,7	1,1	1,5	230/400	20.7

*pump power at 8 m/wh

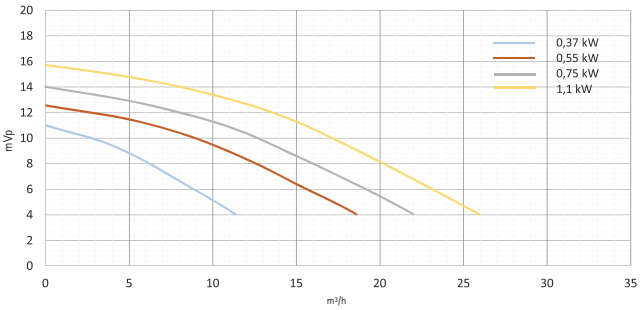

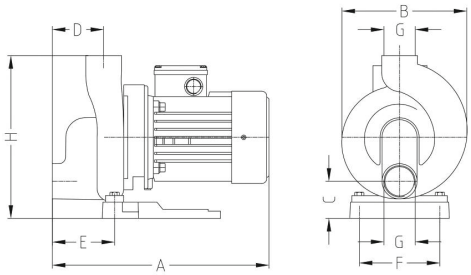

Dimensions (mm)

Item no.	A	B	C	D	E	F	G	H
11424, 11425	359	190	56	78	100	125	1 1/2"	250
11426, 11418	377	190	56	78	100	125	1 1/2"	250
11427, 11419	395	190	56	78	100	125	1 1/2"	250

POOL PUMP 1,5 kW – 4,0 kW

Code	Pump capacity m³/h*	Power output kW	HP	Voltage	kg
115201	34,8	1,5	2,0	230/400	25,7
115211	51,6	2,2	3,0	230/400	27,7
115221	80,7	4,0	5,4	400/690	35,0

*pump power at 8 m/wh

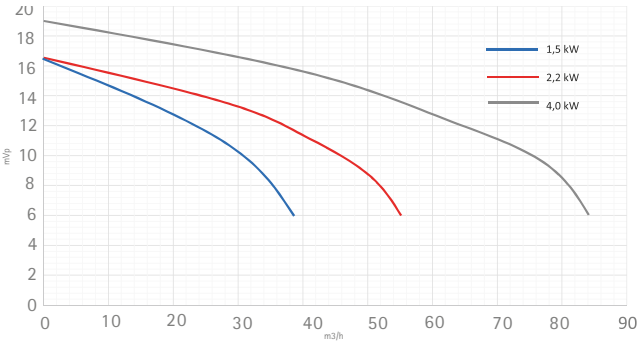

Dimensions (mm)

Item no.	A	B	C	D	E	F	G	H	I	J
115201, 115211	445	245	230	122	77	155	130	2 1/2"	82	220
115221	540	285	230	122	77	155	130	2 1/2"	82	220

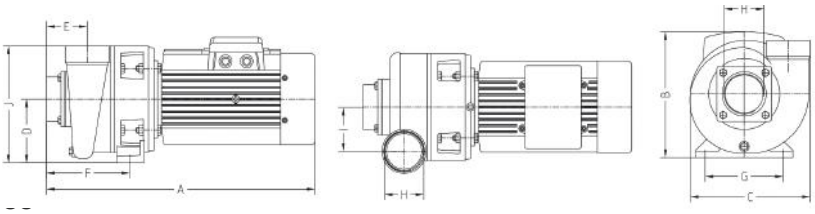

Made in Germany

JET SWIM UNIT EVOLUTION – FLAT, DYNAMIC, ELEGANT!

- fitting kit Evolution
- incl. wall kits
- 2 directionally adjustable single jet nozzles
- 2 separate suction Ø 280 mm and fitting made of V4A / AISI 316L
- piezo switch with 5 m cable, protection class IP65 and control, degree of protection IP54
- gunpowder or bronze pump 2.6 kW
- 400V, DS, 50Hz
- power consumption 3.4 kW / 5.8 A
- pump capacity 63 m³/h
- flange set: bronze
- kit: gunmetal or bronze (analog pump)

DIN compliant by anti-suction

Flange for liner pools

Model	Suitable for	kg	Code
Gun metal*	Concrete pools		988-B
Gun metal*	Liner pools (incl. Flange)		988-F
Gun metal*	Prefabricated pools		988-FE
Bronze	Concrete pools		988-BB
Bronze (Gbz10) **	Liner pools (incl. Flange)		988-FB
Bronze (Gbz10) **	Prefabricated pools		988-FEBR

* not suitable for salt electrolysis ** max. salt concentration 6% max. 750 mg / l chloride content for V4A stainless steel / AISI 316

NEW

Art. No. 984-F

HUGO LAHME COUNTER-CURRENT SWIMMING

Taifun Duo

Consisting of: recessed housing 1-piece, made of gunmetal, cpl. with 1 PG 9 protective tube for the pneumatic hose, 1 tube G¾ for the air hose, connection for the potential ring line.
The kit can be used both at the rear and at the
Front form flush to be attached.

- Connection fitting with cover made of stainless steel V4A (1.4404 / 1.4571)
- Pneumatic or piezo switch as well as air regulation and volume adjustment.
- The jet nozzle is directionally adjustable
- The valve has a continuous plaster compensation up to 35 mm
- 2.6kW red brass or bronze pump,
- Pneumatic circuit protection IP 54 with 5 m pneumatic hose or piezo circuit
- Protection IP 54 with 5 m cable
- Pump capacity 63 m3 / h

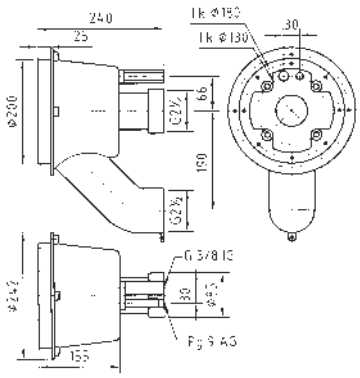

Model	Suitable for	kg	Code
Gunmetal*	foil basin (including flange set)		984-F
Gunmetal*	prefabricated pools		984-G
Bronze (Gbz10)**	Foil bowl (including flange set)		984-FB
Bronze (Gbz10)**	prefabricated pools		984-GB

* not suitable for salt electrolysis ** max. salt concentration 6% max. 750 mg / l chloride content for V4A stainless steel / AISI 316

05

POOL CLEANING

Dive in and enjoy with all senses: in this moment will determine whether all important parameters fit. A combination of different cleaning products is necessary to achieve the optimum water quality: whether brushes, rakes, vacuum heads or fully automatic pool robots - clean water is the goal.
Fully automatic pool robots clean comfortably. Some of them drive up pool walls and remove all dirt particles.

OVERVIEW

92	Automatic Cleaners
96	Vacuum Heads
97	Thermometer
98	Wall Brushes
99	Leaf Skimmer
100	Water Testing, Pool Testing
103	Floating Dispenser
104	Hoses
105	Tele Handles, Wintering Float & Plug

VORTEX PRO RV4550

AUTOMATIC POOL CLEANER (FLOOR + WALLS)

Suitable for private swimming pools with straight walls **(maximum size up to 15 x 7 m),** for flat, gently sloping and different inclinations of the pelvic floor.
With lift system, large removable and easy to clean filter canister, strong and constant suction power by cyclone technology, filter indicator, floating kinetic remote control including lift system function, access the filter basket from above, including caddy and remote control.

Safety systems:	stranding system, dry running protection, electronic protection of motors
Surfaces:	liner, concrete and prefabricated pools, tile and stainless steel pools require special equipment (see page 94)
Cleaning and brushing programs:	3 x floor time (60/90/120 min.) 3 x floor time, walls and waterline (120/150/180 min.)

TECHNICAL DETAILS

Number of motors	3
Supply voltage	230 V / 50 Hz
Cleaner dimensions (LxBxH)	43 x 48 x 27 cm
Cleaner weight	9,5 kg
Package dimension	56 x 56 x 46 cm
Package weight	19,2 kg

Filtering surface	1.180 cm²
Filtering capacity	5 L
Theoretical cleaning width	27 cm
Cable length	18 m
Pump flow	16 m³/h
Drive system	2 drive wheels

Patented cyclone suction power

The strong and constant suction power of cyclonic technology provides intelligent management of the water flow. A high power vortex is generated inside. Thereby the dirt particles remain in motion during the suction and the filter remains free. The result: a constant suction and up to 30 % more power compared to traditional pool robots.

Patented lift system 20 % less effort when removing from water

The effort to remove the robot out of the swimming pool is a piece of cake thanks to the strong waterjet at the back, which is activated when leaving the pools.

3 years manufacturer's warranty

Retail-protected product – no distribution over Internet

Article	Code	kg
VORTEX PRO RV4550	158-5	19,2

RC4351 NEW

CYCLONX PRO RC4350 + RC4351

AUTOMATIC POOL CLEANER (FLOOR + WALLS)

Suitable for embedded and built with straight walls for private pools **(recommended size 8 x 4 m, max. size up to 10 x 5 m)**, for flat, gently sloping and different inclinations of the basin floors.
Cyclone technology for strong and constant suction power, with brushes, push'n go system for easy take out the filter basket by pushing a button, access filter system from above, including caddy.

Safety systems:	stranding system, dry running protection, electronic motor protection
Surfaces:	liner and concrete pools (#158-6), prefabricated pools (#158-7), tile and stainless steel pools require special equipment (see page 94)
Cleaning and brushing programs:	1 x floor only (90 min.) 1 x floor, walls and waterline (150 min.)

TECHNICAL DETAILS

Number of motors	2	Filter surface	850 cm²
Supply voltage	230 V / 50 Hz	Filtering capacity	3,7 L
Cleaner dimensions (LxBxH)	41 x 42 x 28 cm	Theoretical cleaning width	22 cm
Cleaner weight	9,0 kg	Cable length	15 m
Package dimension	56 x 56 x 46 cm	Pump flow	16 m³/h
Package weight	18,4 kg	Drive system	tracks

The control box

Powerful control box in modern design.

2 years manufacturer's warranty

Push`n`go: The patented system allows easy access to the filter basket and increases the ease of cleaning

The filter basket releases with a push of a button.

The filter basket can now removed easily.

The cover removes by pressing the two buttons at the sides of the lid.

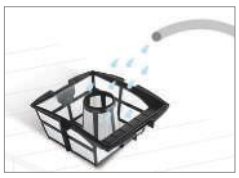

Insert the filter basket after cleaning. The basket will engage with a soft click.

Retail-protected product – no distribution over Internet

Article	Code	kg
CYCLON X PRO RC4350 for liner and concrete pools	158-6	18,4
CYCLON X PRO RC4350 for prefabricated pools	158-7	18,4

Art.Nr.158-5-E2
Art.Nr. 158-5-E3
Art.Nr. 158-5-E4

Art.Nr. 158-5-E1

Art.Nr. 158-5-E5

ACCESSORIES: AUTOMATIC POOL CLEANER ZODIAC VORTEX PRO RV4550

Article	Code
Filter basket, very fine (60µ), single, for all Vortex models, except Vortex 1	158-5-E2
Filter basket, fine, single, for all vortex models, except Vortex 1	158-5-E3
Filter basket, coarse (200µ), single, for all Vortex models, except Vortex 1	158-5-E4
Tire for tile and stainless steel pools for Vortex models (front, 2 pieces)	158-5-E1
Brushes (2 pieces)	158-5-E5

ACCESSORIES: AUTOMATIC POOL CLEANER ZODIAC CYCLON X PRO RC4350

Art.Nr. 158-6-E4
Art.Nr. 158-6-E5
Art.Nr. 158-6-E6

Article	Code
Brushes (2 pieces), incl. rollers, black, for prefabricated pools	158-6-E1
Brushes (2 pcs.), incl. rollers, PVA, for tile and stainless steel pools, from year of construction 2016 – requires software customizations –	158-6-E2
Brushes (2 pcs.), incl. rollers, for liner and concrete pools, standard	158-6-E3
Filter basket, very fine (60µ) individually	158-6-E4
Filter basket, fine (100 µ/standard) individu-ally	158-6-E5
Filter basket, coarse (200 µ) individually	158-6-E6
Caterpillar band (2 pieces)	158-6-E7
Control box type 2c	158-6-E8
Tarnsport caddy	158-6-E9

Art.Nr. 158-6-E1

Art.Nr. 158-6-E2

Art.Nr. 158-6-E9

Art.Nr. 158-6-E7

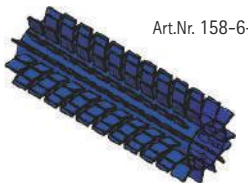

Art.Nr. 158-6-E3

Art.Nr. 158-6-E8

SHARKVAC XL PILOT

POWERFUL AND EFFICIENT AUTOMATIC POOL CLEANER

2 years manufacturer's warranty

Suitable for built-in pools **(maximum size up to 12 x 6 m)**, for any kind of floor with straight walls, for flat, slightly sloping and different inclinations of the pelvic floors and diamond point – also for composite floors. Easy to use: no bag, no hose. Eeasy access from the top to the large capacity filter block, the cleaning robot no longer needs to be turned over, recognition and recirculation as soon as the robot leaves the water, for descending pools, including transport caddy.

Surfaces: useable for all types of surfaces: tiles, liner, concrete and prefabricated pools

Cleaning and brushing programs: cleans and sucks the floor, the walls and the waterline of the pool inside of 3 hours, program selection "floor" or "floor and wall" via a selector switch, 2 working cycles selectable:
– only ground (120 minutes)
– floor and wall (180 minutes)

TECHNICAL SPECIFICATIONS

Engine block	24 V
Power supply	230 V / 50 Hz
Cleaner dimensions (LxBxH)	41 x 41 x 28 cm
Weight	12,35 kg
Filter area	7.420 cm^2
Cable length	17 m
Driving speed	16,76 meter per minute
Suction	17 m^3/h
Autonomous calculator	yes

Art.Nr. 158-15-E10

Caddy included; easy and fast transport.

Art.Nr. 158-15-E1
Art.Nr. 158-15-E2

Seasonal cleaning filter optional for larger contaminants.

Access to the filter plates from above. Easy care. The filter plate can be easily removed, cleaned and replaced.

Article	Code	kg
SharkVac XL Pilot	158-13	12,35

ACCESSORIES: SHARKVAC XL PILOT

Article	kg	Code
Filter cartridge refill set	0,2	158-15-E1
Filter cartridge refill set – spring	0,2	158-15-E2
Replacement brush for all surfaces	0,5	158-15-E3
Replacement brush for all surfaces, especially tiles	0,5	158-15-E4
Filter unit complete (without filter box)	0,2	158-15-E9

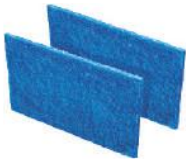

Art.Nr. 158-15-E1
Art.Nr. 158-15-E2

Art.Nr. 158-15-E9

Art.Nr. 158-15-E4

VACUUM HEADS

VENTURI VACUUM CLEANER

Material: ABS plastic, with three-part aluminum handle, 135 cm, small simple vacuum cleaner with hose connection
color: blue

Article	Packing	Code	kg
Vacuum cleaner	24	109	0,5

MIDA.Sweep GROUND CLEANER

Material: ABS plastic, flexible with 8 wheels, width: 33 cm, with 2 bottom and 2 rows of brushes on the side, connection 38 mm, single packing: in foil
color: blue / white

Article	Packing	Code	kg
MIDA.Sweep	12	110	0,83

MIDA.Clean GROUND CLEANER

Material: ABS plastic, width: 29 cm, 8 brushes, with brushes on bottom, 2 rows with brushes on the side, heavy version, connection 32/38 mm, swivel adapter
single packaging: in foil
color: blue / white

Article	Packing	Code	kg
MIDA.Clean	12	113-N	0,87

MIDA.Vac GROUND CLEANER

Material: ABS plastic, width: 29 cm, 8 brushes, with brushes on bottom, without side brushes, connection 32/38 mm, swivel adapter
single packaging: in foil
color: blue / white

Article	Packing	Code	kg
MIDA.Vac	12	112-N	0,82

THERMOMETER

MIDA.Therm THERMOMETER

Material: ABS plastic, for depth measurement (Ø 30 cm), with swimming ring, Celsius & Fahrenheit scale, hi-tech welding, in single box, with fastening cord, single packing: in carton
color: blue
Optional: individual name printing from 1,000 pieces possible

Article	Packing	Code	kg
MIDA.Therm	20	062-N	0,55

MIDA.Look THERMOMETER

Material: ABS plastic, hard-wearing model, temperature scale in Celsius and Fahrenheit, with floating head, length: 18.5 cm, with fastening cord
single packing: in carton
color: white

Article	Packing	Code	kg
MIDA.Look	28	068	0,06

MIDA.Grade THERMOMETER

Material: ABS plastic, length: 17 cm, with ladle, with fastening cord
single packaging: in foil
color: blue

Article	Packing	Code	kg
MIDA.Grade	1	069-A	0,08

ECONOMY THERMOMETER

Material: ABS plastic, length: 17 cm, temperature scale in Celsius and Fahrenheit, with fastening cord
color: blue

Article	Packing	Code	kg
Economy Thermometer	150	066	0,03

WALL BRUSHES

145-A

MIDA.Brush BASKET BRUSH CURVED

Material: ABS plastic, width: 45 cm
color: blue

Article	Packing	Code	kg
MIDA.Brush with white bristles, Single packaging: in foil	12	145-A	0,30

145-ALU

Material: aluminum or aluminum reinforcement, complete aluminum frame, width: 45 cm, single packaging in foil
color: aluminum / blue with white bristles

Article	Packing	Code	kg
MIDA.Brush aluminum	24	145-ALU	0,34

MIDA.Algae ALGAE BRUSH

Material: ABS plastic, width: 26 cm, with stainless steel or plastic bristles
single packaging: in foil
color: blue

Article	Packing	Code	kg
MIDA.Algae with stainless steel bristles	24	146-C	0,23

BRUSH FOR CORNER

Material: ABS plastic, with adjustable vacuum ring and hose connection
single packaging: in foil
color: blue / white

Article	Packing	Code	kg
Brush for corner	24	146	0,15

CLEANING SPONGE

Material: ABS plastic, ideal for removing algae and other soft residues
single packaging: in foil
color: blue

Article	Packing	Code	kg
Cleaning sponge	120	108	0,06

LEAF SKIMMER

MIDA.Catch LEAF SKIMMER

Material: ABS plastic, with white deep net,
width: 40 cm, length: 27 cm
color: blue

Article	Packing	Code	kg
Leaf skimmer MIDA.catch with hard-shell packing	15	142	0,35

MIDA.Rake LEAF SKIMMER

Material: ABS plastic, with unbreakable aluminum frame and aluminum handle, with white deep net, width: 44 cm, length: 20 cm single packing: in foil (# 141)
hard-shell packaging (# 141-ALU)
color: silver / blue

Article	Packing	Code	kg
Leaf skimmer MIDA.Rake single packaging: in foil	24	141	0,25
Leaf skimmer MIDA.Rake blister	16	141-ALU	

MIDA.Skim LEAF SKIMMER

Material: ABS plastic, with white flat net,
width: 43 cm, length: 27 cm
single packaging: in foil
color: blue

Article	Packing	Code	kg
Leaf skimmer MIDA.Skim	20	140	0,21

MIDA.Leaf LEAF SKIMMER

Material: break-resistant aluminum frame and aluminum handle / ABS plast with white flat net, width: 31 cm, length: 35 cm
single packaging: in foil
color: silver / blue

Article	Packing	Code	kg
Leaf skimmer MIDA.Leaf	24	143	0,24

MIDA.Eco LEAF SKIMMER

Single packaging: in foil
color: silver / blue

Article	Dimensions	Packing	Code	kg
Material frame and handle: ABS plastic	Width: 29 cm Length: 43 cm	24	139-A	0,16

Purchase only in full packaging units.

141-VK

143-VK

MIDA.Vario LEAF SKIMMER

Material: frame ABS plastic / aluminum handle, with blue deep net, single packaging
color: blue

Article	Dimensions	Packing	Code	kg
Ground skimmer deep, with hard shell plastic frame	Width: 45 cm Length: 20 cm	12	141VK	0,50
Leaf skimmer deep, with hard shell plastic frame	Width: 35,5 cm Length: 32,5 cm	12	143VK	0,50

WATER TESTING, POOL TESTING

POOL LAB® 1.0 PHOTOMETER

Made in Germany

The new PoolLab® 1.0 is the perfect solution for the professional water analysis of private pools and spas.

Measurement parameters: pH 6.50 - 8.40, Chlorine (free/bound/total): 0.00 - 6.00 mg / l (ppm) or bromine**, Alkalinity (acidity, carbonate hardness): - 300 mg / l (ppm) CaCO3, Cyanuric acid (stabilizer): 0 - 160 mg / l (ppm), Active oxygen (MPS): 0.0 - 30.0 mg / l(ppm) *, bromine: 0.0 - 13.5 mg / l (ppm) **, Chlorine dioxide: 0.0 - 11.4 mg / l (ppm) **, ozone: 0.00 - 4.00 mg / l (ppm) **,Hydrogen peroxide (LR): 0.00 - 2.9 mg / l (ppm) *, Hydrogen peroxide (HR): 0-200 mg / l (ppm) *, Calcium Hardness: 0 - 500 mg / l (ppm) CaCO3 *, Total hardness: 0 - 500 mg / l (ppm) CaCO3 *

Kit contents: 1 x PoolLab® 1.0 with Bluetooth 4.0, IP67 water resistant, 1 x transparent plastic box, 1 x light cap, 1 x mixing rod made of plastic, 3 x AAA batteries, manual/instructions, free PoolLab® software*** and App***, free PoolLab® cloud service

2 years manufacturer's warranty

Reagents: 20 tablets phenol red photometer, 20 tablets DPD no. 1 photometer, 10 tablets DPD no. 3 photometer, 10 tablets alkalinity-M photometer, 10 tablets CYA test photometer

* Requires tablets that are not included in the basic kit.
** Requires Glycine tablets (not included in the basic kit) if chlorine is present in the sample water.
*** Download

Article	Packing	Code
Pool LAB® 1.0 Photometer	1	060

Replacement Tablets	Packing	Code
Complete set, consisting of: 20 x DPD no. 1, 10 x DPD No. 3, 20 x phenol red (pH), 10 x alkalinity, 10 x cyanuric acid	1	060-E1
DPD No. 1, 50 pieces	1	060-E2
DPD No. 3, 50 pieces	1	060-E3
Phenol red (pH), 50 pieces	1	060-E4
Alkalinity, 50 pieces	1	060-E5
Cyanuric acid, 50 pieces	1	060-E6
Total hardness 1 reagents 20 ml for pool LAB 1.0 photometer, 50 pieces	1	060-E7
Total hardness 2 reagents 10 ml for pool LAB 1.0 photometer, 50 pieces	1	060-E8

ELECTRONIC METER

Electronic meters need no additional reagents to measure professionally and accurately different water parameters. The measurement result is displayed on the display within seconds after the tester has been immersed in the measuring water.
Calibration private pools: once a week.

2 years manufacturer's warranty

057

059

058

Made in Germany

Product	Measuring range	Resolution	Accuracy	Calibration	Aut. Temp. Compens.
Electronic pH Meter	pH (0.0 - 14.0)	0.1 pH	+/- 0.1 pH	1 point, manuell	–
Electronic TDS Meter (total dissolved salts)	TDS (0 - 10000 mg/l) (0.00 - 10.00 ppt)	0.01 ppt	+/- 2% FS	1 point, manuell	automatically 0 - 50°C with ß=2%/°C
Electronic Meter pH, ORP and temperature	pH (0.00 - 14.00) ORP (+/-1999mV) Temp. (0 - 50°C)	0.01 pH 1 mV 0.1°c	+/- 0.1 pH +/- 5mV +/- 1 °C	1 point, manuell	automatically 0 - 50°C with ß=2%/°C

Article	Packing	Code
Electronic pH Meter	4	057
Electronic TDS Meter (total dissolved salts)	4	059
Electronic Meter pH, ORP and temperature	4	058

Buffer solutions	Packing	Code
Buffer solution pH 7, 50 ml	4	102030-E1
Buffer solution ORP 468 mV, 50 ml	4	102030-E3
Buffer solution TSD 6.44 ppt, 20 ml	4	059-E1

055

055-3 and 055-4

MIDA.SET / PH & CHLORINE TESTER

Test set including 20 tablets (rapidly dissolving) for chlorine and pH probe, the tablets are available separately.

- Measuring range pH: 6.8 - 8.2
- Measuring range Cl 0.2 - 2.0 ppm

Article	Packing	Code	kg
MIDA.Set / pH & Chlorine Tester (25 pieces)	25	055	0,06
250 tablets DPD 1 (Cl)	250	055-3	0,0028
Tablets Phenol RED (pH)	250	055-4	0,0028
Replacement pack Tabl. DPD 3	250	055-5	0,09
Replacement pack for Oxygen (DPD 4)	250	055-6	0,09

MIDA.Test

Test set for chlorine and pH with 15 ml-bottles, delivery in a blue case.

- Measuring range pH: 6.8 - 8.2
- Measuring range Cl: 0.2 - 1.0 ppm

Article	Packing	Code	kg
MIDA.Test	25	050	0,076
Replacement bottle Cl 15 ml	25	050-1	0,024
Replacement bottle pH 15 ml	25	050-2	0,024

TEST STRIPS FOR THE MEASURMENT OF SALT (NaCl)

Packed in aluminum blisters – 2.5 years durability

Long shelf life: use overstock also in following season. Test strips give you a good indication of your water levels. The TSL600 test strip (capillary method) uses silver nitrate as reagent and thus reacts directly with the salt to be measured.

Product description: Test strips for the measurement of salt (NaCl)
each 5 strips are blistered in aluminum
Number of test strips: 20
measuring range NaCl: 0 – 7000 mg/l

Article	Packing	Code
Test strips for the measurement of salt (NaCl)	1	TSL-600
3-in-1 test strips for measuring pH, free chlorine, bromine and alkalinity values. 10 strips per can Number of tests: 50 Shelf life 3 years	1	TSL-100

FLOATING DISPENSER

MIDA.Float FLOATING DISPENSER

Dosing floating dispenser with adjusting ring, material: ABS plastic, large version, Transparent lid, carries up to 1 kg of tablets, diameter: 17 cm, opening: 9.5 cm
single packaging: in foil
color: blue white

Article	Packing	Code	kg
MIDA.Float	16	045-N	0,36

MIDA.Ora FLOATING DISPENSER

Dosing floating dispenser with adjusting ring, material: ABS plastic, carries up to 1 kg of tablets, diameter: 17 cm, opening: 9.5 cm
single packaging: in foil
color: blue / white

Article	Packing	Code	kg
MIDA.Ora	12	047-A	0,23

MIDA.Mini FLOATING DISPENSER

Dosing floating dispenser with adjusting ring, material: ABS plastic, carries up to 1 kg of tablets, diameter: 13 cm, opening: 6 cm
single packaging: in foil
color: blue / white

Article	Packing	Code	kg
Mini Floating Dispenser	24	048-M	0,10

HOSES

Made in Germany

LDPE-HOSE

Material: Polyethylene, long-term resistant to salt water, chlorine, UV radiation, individually divisible by molded sleeves, suitable for installation in existing filter circuits. 50 m roll with molded sleeves every 0.5 m, flexible
color: black
application: floor vacuum cleaner, floor suction brush, sand filter units, pumps, swimming pool absorbers, skimmers

Article	Ø in mm	Packing	Code	kg
LDPE-Hose	38	7 rolls per pallet	170	11,7

Made in Germany

SWIMMING POOL HOSE

Material: Polyethylene, high stability and flexibility, very easy to lay, easily dividable by molded sleeves, puncture-resistant, high chemical resistance. 100 m roll with molded sleeves every 1.5 m, flexible.
color: blue
application: Floor vacuum, floor suction brushes

Article	Ø in mm	Packing	Code	kg
Swimming Pool Hose	38	6 rolls per pallet	169M	20,0
Swimming Pool Hose	32	7 rolls per pallet	168M	15,0

Made in Germany

SWIMMING POOL HOSE INCLUDED NOZZLES

Material: polyethylene, swimming pool hose with white sleeves on both ends, flexible
single packing: in carton
color: blue

Article	Ø in mm	length (m)	Packing	Code	kg
Swimming Pool Hose	38	7,5	1 roll	8576	2,00
Swimming Pool Hose	38	9	1 roll	8577	2,50
Swimming Pool Hose	38	15	1 roll	8578	4,20
Swimming Pool Hose	38	30	1 roll	8579	8,50

PVC NOZZLES FOR SWIMMING POOL HOSE

material: ABS Plastic
color: blue

Article	Packing	Code	kg
Hose nozzle for Swimming Pool, Ø 38 mm	1	6524	0,05

NEW

Equipment

Article	Size	Packing	Code	kg
Hose connection	Ø38	1	02300	0,05
Hose connection	32 mm - 38 mm	1	02301	0,05

TELE HANDLES, WINTERING FLOAT & PLUG

TELESCOPE HANDLES

2 -PIECE

Aluminium double tube anodized, with excentric, 2 sleeves,
Wall thickness 1.1 mm, color: silver/beige

Article	length (m)	Packing	Code	kg
Telescope handle	1,80 - 3,60	8	210-TM	1,50
Telescope handle	2,40 - 4,80	8	220-TM	1,50

TELESCOPE HANDLES

3 -PIECE

Aluminium double tube anodized, with excentric , 2 sleeves
Wall thickness 0.8 mm, color: silver/beige

Article	length (m)	Packing	Code	kg
Telescope handle	1,20 - 3,60	20	3120-TS	0,76
Telescope handle	1,50 - 4,50	20	3150-TS	0,73

06

FITTINGS

No pool is like the other. For a complete swimming pool piping - no matter in which size or shape - high-quality molded parts made of PVC-U are available. All components are coordinated, dimensionally stable and fit together perfectly. Modern adhesives provide lasting, elastic and secure connections.

OVERVIEW

108	MIDA.Flo Rotary Disc Valves, MIDAS 3-ways Ball Valve 3-way Rotary Disc Valve Electric
109	Equipment for Solar
110	MIDAS 2-way Ball Valves, Butterfly Valves, MIDAS Check Valves
111	PVC-U Assortement
119	Flanges, Sealings
120	fitt b-active Plasticized Hard PVC Hose
121	Chlorine-Resistant Tube, PVC Adhesive Hose
122	Pipes PN 10, PN 16
123	Glue, Cleaner, Clamp

MIDA.FLO

2- & 3-WAYS ROTARY DISC VALVES

- 2- and 3-way rotary disc valve
- 4 screws with nuts (not even attractive)
- pressure-resistant lid and Turntable set of Ultranyl
- housing made of PVC-U
- 10 bar working pressure, 15 bar test pressure
- low pressure drop
- Adhesive connections inside 50 mm, 63 mm outside
- color: black

ADVANTAGES COMPARED WITH ONE BALL VALVE

- three sizes in a valve
- adjustable positions
- access from above

MIDA.FLO 2-WAYS VALVE

MIDA.FLO 3-WAYS VALVE

Type	adjustable positions	Packing	Code	kg
2-way-valve	10	8	301	0,67
3-way-valve	19	8	306	0,75

MIDAS 3-WAYS BALL VALVE

PVC-U, EPDM-seal, HDPE-shell, slip connection, 10 bar working pressure, color: grey

d	Length in mm	Packing	Code	kg
50	240	4	3395-T	0,53

3-WAY ROTARY DISC VALVES PVC-U ELECTRIC

WITH SLIP CONNECTION - ELECTRIC OPERATED

Electric 3-way control valve, PVC-U with rotary damper. Inclusive display which show the closed path. In the automatic valve the way can be selected between 90° and 180°. Color: black.

230 VOLT

d1-d2	Code	kg
50-63	41863	1,78
63-75	41864	2,40

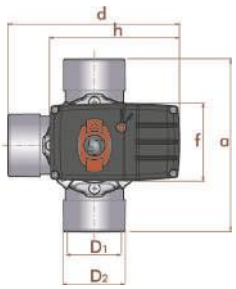

d1-d2	a (mm)	d (mm)	f (mm)	h (mm)
50-63	159	183	94	159
63-75	210	209	94	159

2-WAY MOTOR VALVE FOR SOLAR INSTALLATIONS, IP 65

Engine valve d 50 mm and d 63 mm, 24 V or 230 V for the connection to solar control units. The unit is controlled by a separate filter or solar control (available on request). In conjunction with an engine valve, a water and solar sensor, a control of the solar operation, the collectors of swimming pools are controlled automatically. 2 x glue sleeve, 2 x nut, 2 x d 50 mm or d 63 depending on the model (Protection IP 65). Color: black.

Made in Germany

Article	Code	kg
2-Way-Motor-Valve 230 V, d 50 mm	48.330	1,10
2-Way-Motor-Valve 230 V, d 63 mm	48.327	1,50
2-Way-Motor-Valve 24 V, d 50 mm	48.336	1,10
2-Way-Motor-Valve 24 V, d 63 mm	48.337	1,50

TEMPERATURE / SOLAR CONTROLLER

Temperature control unit for heating the pool with a heat exchanger or a solar installation (motor valve 230 V or solar pump max. 1500 W), temperature regulation scale: 0-40°C, IP 40, incl. water sensor (solar sensor optional)

Made in Germany

Article	Code	kg
Temperature / Solar Controller	49.227	0,70

SOLAR CONTROLLER

Compact analogue solar control unit incl. a 2-way ball valve 230 V, temperature regulation scale: 16-36°C, IP 40, incl. water + solar sensor, color: grey.

Made in Germany

Article	Ø	Code	kg
Solar Controller	50 mm	49.235	2,50
Solar Controller	63 mm	49.236	2,90

ACCESSORIES / SPARE PARTS (#49.227, #49.235 and #49.236)

Article	Code	kg
Solar sensor with 10 m cable	51.500	0,40
Water sensor with 5 m cable	51.501	1,00

SWING CHECK VALVE

Material: PVC-U, EPDM O-ring, minimum space required for installation, easy installation between flanges, vertical and horizontal installation possible, excellent flow characteristics, Housing and damper plate made of PVC-U, plug / screw made of PP, housing seal and valve seal made of EPDM / Viton, also separately available, color: grey.

- working pressure: 0,2 bar

d	DN	Inch	PN	Packing	Code	kg
63	50	2"	10	15	890	0,27
75	65	2½"	10	10	891	0,32
90	80	3"	10	8	892	0,40
110	100	4"	10	5	893	0,58
125	110	4"	10	5	894	0,68
140	125		10	10	895	0,82
160	150		10	5	896	0,96
225	200		10	3	898	

MIDAS 2-WAYS BALL VALVE

Material: PVC-U, PE ball sealing, EPDM o-ring, secured slip connection on both sides, 10 bar working pressure
color: grey

PE-BALL SEALING

d	PN	Length in mm	Packing	Code	kg
32	10	124	10	393-C	0,35
40	10	134	6	394-C	0,45
50	10	148	16	395-C	0,72
63	10	168	12	396-C	1,07
75	10	232	4	397-C	2,55
90	10	269	2	398-C	4,25
110	10	275	2	399-C	4,50

TEFLON-BALL SEALING

d	PN	Length in mm	Packing	Code	kg
32	10	124	16	393-IC	0,36
40	10	142	6	394-IC	0,49
50	10	167	16	395-IC	0,75
6	10	198	12	396-IC	1,07
75	10	232	4	397-IC	3,55
90	10	269	2	398-IC	4,25

BUTTERFLY VALVE

CLASSIC

Material: PVC-U, Ideal for flow control using minimal piping space, minimum pressure loss, low maintenance, resistance to many inorganic chemicals, good flow properties, good mechanical strength. One piece of PVC-U body, new disc design, sizes from 63 mm to 225 mm, rubber seal EPDM

color: grey

d	PN	Packing	Code	kg
63-75	10	2	8614	1,65
90	10	2	8615	1,90
110	10	2	8616	2,60
125-140	10	2	8617	3,50
160	10	2	8618	4,55
200–225	10	2	8619	7,35

MIDAS CHECK VALVES

Material: PVC-U, Spring-loaded glue connection on both sides, color: grey.

d	PN	Length in mm	Packing	Code	kg
40	16	140	6	384-C	0,55
50	16	160	12	385-C	0,72
63	16	190	10	386-C	1,20
75	10	232	4	387-C	2,33
90	10	269	2	388-C	3,40
110	10	279	2	389-C	4,20

PVC-U ASSORTEMENT

Delivery only in full packaging units.

ELBOW 90°

SLIP CONNECTION / SLIP CONNECTION

Material: PVC-U, color: grey

1) kiwa

d	DN	PN	Packing	Code	kg
40	32	16	55	814[1)]	0,10
50	40	16	60	815[1)]	0,17
63	50	16	36	816	0,30
75	65	16	21	817[1)]	0,44
90	80	16	12	819	0,67
110	100	16	14	811	1,21
125	110	16	10	01721	1,84
140	125	16	5	01722	2,42
160	150	10	4	01723	2,70
200	175	10	3	01724	5,00
225	200	10	2	01725	6,90

REDUCING ELBOW 90°

SLIP CONNECTION X – SLIP CONNECTION

Material: PVC-U, color: grey

d x D – d1	DN	PN	Packing	Code	kg
50 x 50 - 40	40	16	70	02237	0,16
63 x 63 - 50	50	16	32	02238	0,31

ELBOW 45°

SLIP CONNECTION / SLIP CONNECTION

Material: PVC-U, color: grey

1) kiwa

d	DN	PN	Packing	Code	kg
40	32	16	60	824[1)]	0,08
50	40	16	80	825	0,05
63	50	16	45	826	0,15
75	65	16	25	827[1)]	0,35
90	80	16	15	829[1)]	0,60
110	100	16	16	821	0,95
125	110	16	12	01755	1,47
140	125	16	8	01756	1,85
160	150	10	5	01757	2,08
200	175	10	4	01758	3,68
225	200	10	2	01759	5,25

REDUCING ELBOW 45°

SLIP CONNECTION X – SLIP CONNECTION

Material: PVC-U, color: grey

d x D – d	DN	PN	Packing	Code	kg
50 x 50 - 40	40	16	90	02241	0,15
63 x 63 - 50	50	16	50	02242	0,29

kiwa Quality tested by:
Kiwa Germany, Construction and Building Materials Testing Division

ELBOW 90°

SLIP CONNECTION / THREADED CONNECTION

Material: PVC-U, color: grey

d x threaded	DN	PN	Packing	Code	kg
40 x 1¼"	32	10	50	01731	0,10
50 x 1½"	40	10	28	01732	0,20
63 x 2"	50	10	16	01733	0,36
75 x 2½"	65	10	9	22596	0,44
90 x 3"	80	10	6	22597	0,75
110 x 4"	100	10	3	22598	1,17

ELBOW 90° REINFORCED

SLIP CONNECTION / THREADED CONNECTION

Material: PVC-U and stainless steel, color: grey

d x threaded	DN	PN	Packing	Code	kg
20 x 1½"	15	16	130	01740	0,5

ELBOW 90°

INTERNAL THREAD / INTERNAL THREAD

Material: PVC-U, color: grey

threaded	DN	PN	Packing	Code	kg
1½"	40	10	28	01738	0,20

ELBOW 90°

SLIP CONNECTION / EXTERNAL THREAD

Material: PVC-U, color: grey

d x threaded	DN	PN	Packing	Code	kg
50 x 1½"	40	10	80	02239	0,13
63 x 2"	50	10	42	02240	0,24

BOW 90°

SLIP CONNECTION / SLIP CONNECTION

Material: PVC-U, color: grey

d	DN	PN	Packing	Code	kg
40	32	16	25	01970	0,18
50	40	16	30	01971	0,30
63	50	16	15	01972	0,55
75	65	16	8	01973	0,90
90	80	16	4	05331	1,55
110	100	16	4	05332	3,15
125	110	10	5	05333	3,30
140	125	10	4	05334	3,40
160	150	10	4	05335	5,03
200	175	4	1	05336	8,40
225	200	4	1	05337	12,00

T-PIECE 45°

3 SLIP CONNECTION

Material: PVC-U, color: grey

d	DN	PN	Packing	Code	kg
40	32	16	30	864	0,18
50	40	16	32	865	0,29
63	50	16	18	866	0,51
75	65	16	11	867	0,74
90	80	16	6	869	1,20
110	100	16	7	861	2,13

CROSS PIECE

4 SLIP CONNECTION

Material: PVC-U, color: grey

d	DN	PN	Packing	Code	kg
40	32	16	30	844	0,17
50	40	16	32	845	0,30
63	50	16	16	846	0,54
75	65	16	12	847	0,62
90	80	16	12	849	1,01
110	100	16	6	841	1,77

T-90°

3 SLIP CONNECTION

Material: PVC-U, color: grey

1) kiwa

d	DN	PN	Packing	Code	kg
40	32	16	40	834[1)]	0,13
50	40	16	48	835	0,24
63	50	16	24	836	0,23
75	65	16	15	837[1)]	0,60
90	80	16	8	839	1,03
110	100	16	10	831	1,77

T-90° REDUCING

2 SLIP CONNECTION / INTERNAL THREAD

Material: PVC-U, color: grey

d x threaded	DN	PN	Packing	Code	kg
50 x 1¼"	40 - 32	10	24	01855	0,22
50 x 1"	40 - 25	10	24	01856	0,22
50 x ¾"	40 - 20	10	24	01857	0,22
50 x ½"	40 x 15	10	24	01858	0,22
63 x 1½"	50 - 40	10	13	01859	0,34
63 x 1¼"	50 - 32	10	14	01860	0,39
63 x 1"	50 - 25	10	15	01861	0,39
63 x ¾"	50 - 20	10	15	01862	0,38
63 x ½"	50 - 15	10	15	01863	0,37

kiwa Quality tested by:
Kiwa Germany, Construction and Building Materials Testing Division

T-90°

2 SLIP CONNECTION / INTERNAL THREAD

Material: PVC-U, color: grey

d x threaded	DN	PN	Packing	Code	kg
40 x 1¼"	32	10	19	01799	0,16
50 x 1½"	40	10	21	01800	0,26
63 x 2"	50	10	12	01801	0,47

T-90° REDUCED

3 SLIP CONNECTION

Material: PVC-U, color: grey

d x threaded	DN	PN	Packing	Code	kg
50 x 40	40 - 32	16	48	8504	0,22
50 x 32	40 - 25	16	48	8503	0,22
50 x 25	40 - 20	16	54	01822	0,21
50 x 20	40 - 15	16	56	01823	0,30
63 x 50	50 - 40	16	27	8635	0,37
63 x 40	50 - 32	16	28	8634	0,38
63 x 32	50 - 25	16	30	01826	0,38
63 x 25	50 - 20	16	30	01827	0,37
63 x 20	50 - 15	16	30	01828	0,36
75 x 63	65 - 50	16	16	8756	0,59
75 x 50	65 - 40	16	18	8755	0,60
75 x 40	65 - 32	16	18	01831	0,59
75 x 32	65 - 25	16	18	01832	0,58
90 x 75	80 - 65	16	9	01833	1,00
90 x 63	80 - 50	16	9	01834	1,00
90 x 50	80 - 40	16	9	01835	1,00
90 x 40	80 - 32	16	9	01836	1,02
110 x 90	100 - 80	16	11	01837	1,56
110 x 75	100 - 65	16	12	01838	1,50
110 x 63	100 - 50	16	12	01839	1,46
110 x 50	100 - 40	16	12	01840	1,46

SOCKET

SLIP CONNECTION / SLIP CONNECTION

Material: PVC-U, color: grey

1) kiwa

d	DN	PN	Packing	Code	kg
40	32	16	80	854[1)]	0,06
50	40	16	56	855[1)]	0,09
63	50	16	34	856[1)]	0,13
75	65	16	14	857[1)]	0,28
90	80	16	18	859	0,46
110	100	16	12	851	0,75
125	110	16	16	01881	1,06
140	125	16	12	01882	1,40
160	150	10	6	01883	1,58
200	175	10	3	01884	3,07
225	200	10	4	01885	5,58

ADAPTOR NIPPLE REINFORCED

SLIP CONNECTION / THREADED CONNECTION

Material: PVC-U and stainless steel, color: grey

d x threaded	DN	PN	Packing	Code	kg
50 x 1½"	40	16	56	01912	0,1
63 x 2"	50	16	28	01913	0,1

COVER

SLIP CONNECTION

Material: PVC-U, color: grey

1) kiwa

d	DN	PN	Packing	Code	kg
40	32	16	70	01946[1)]	0,04
50	40	16	48	01947[1)]	0,08
63	50	16	24	01948[1)]	0,11
75	65	16	32	01949[1)]	0,18
90	80	16	16	01950[1)]	0,39
110	100	16	9	01951	0,60

ADAPTOR NIPPLE

SLIP CONNECTION / INTERNAL THREAD

Material: PVC-U, octagonal, color: grey

d x threaded	DN	PN	Packing	Code	kg
50 - 40 x 1¼"	32	10	40	02258	0,11
50 - 40 x 1½"	40	10	40	02257	0,11
50 - 40 x 2"	40	10	45	02256	0,17
63 - 50 x 1½"	40	10	36	02261	0,16
63 - 50 x 2"	50	10	36	02260	0,20
63 - 50 x 2½"	50	10	24	02259	0,24

ADAPTOR NIPPLE

SLIP CONNECTION / EXTERNAL THREAD

Material: PVC-U, octagonal, color: grey

d x threaded	DN	PN	Packing	Code	kg
50 - 40 x 1"	25	10	70	02087	0,08
50 - 40 x 1¼"	32	10	68	02086	0,08
50 - 40 x 1½"	40	10	68	02085	0,09
63 - 50 x 1¼"	32	10	60	02090	0,12
63 - 50 x 1½"	40	10	60	02089	0,13
63 - 50 x 2"	50	10	46	02088	0,14
75 - 63 x 1½"	40	10	30	02093	0,18
75 - 63 x 2"	50	10	30	02092	0,18
75 - 63 x 2½"	65	10	24	02091	0,21
90 - 75 x 2"	50	10	24	02096	0,28
90 - 75 x 2½"	65	10	15	02095	0,31
90 - 75 x 3"	80	10	12	02094	0,33

SOCKET

SLIP CONNECTION / EXTERNAL THREAD

Material: PVC-U, color: grey

d x threaded	DN	PN	Packing	Code	kg
40 x 1¼"	32	10	80	02105	0,07
50 x 1½"	40	10	72	02106	0,08
63 x 2"	50	10	50	02107	0,14
75 x 2½"	65	10	24	02108	0,27
90 x 3"	80	10	28	02109	0,44

kiwa Quality tested by:
Kiwa Germany, Construction and Building Materials Testing Division

SOCKET

SLIP CONNECTION / INTERNAL THREAD

Material: PVC-U, octagonal, color: grey

d x threaded	DN	PN	Packing	Code	kg
40 x 1¼"	32	10	60	01892	0,09
50 x 1½"	40	10	56	01893	0,10
63 x 2"	50	10	28	01894	0,20
75 x 2½"	65	10	14	01895	0,30
90 x 3"	80	10	24	01896	0,48

PLUG

EXTERNAL THREAD

Material: PVC-U, , color: grey

threaded	DN	PN	Packing	Code	kg
1¼"	32	10	80	02126	0,05
1½"	40	10	60	02127	0,07
2"	50	10	70	02128	0,11
2½"	65	10	45	02129	0,16

PRESSURE HOSE NOZZLE

Material: PVC-U, color: grey

D x d	PN	Packing	Code	kg
16 x 16	10	200	02200	0,01
20 x 18	10	200	02201	0,01
20 x 20	10	200	02202	0,01
25 x 25	10	120	02203	0,02
32 x 30	10	80	02204	0,03
40 x 40	10	40	02205	0,05
50 x 50	10	30	02206	0,09
50 x 38	10	40	02207	0,08
63 x 60	10	18	02208	0,14

PRESSURE HOSE NOZZLE

EXTERNAL THREAD

Material: PVC-U, octagonal, color: grey

threaded x E	PN	Packing	Code	kg
1½" x 38	10	36	02224	0,08
1½" x 40	10	36	09032	0,09
1½" x 50	10	30	02223	0,10
2" x 60	10	15	02225	0,08

REDUCTIONS SHORT

SLIP CONNECTION

Material: PVC-U, color: grey

1) kiwa

D x d	DN	PN	Packing	Code	kg
40 x 32	32	16	120	01918[1)]	0,02
40 x 25	20	16	120	01919	0,03
40 x 20	15	16	120	01920	0,03
50 x 40	32	16	60	01921[1)]	0,04
50 x 32	25	16	60	01922	0,05
50 x 25	20	16	60	01923	0,05
50 x 20	15	16	60	01924	0,05
63 x 50	40	16	48	01925[1)]	0,07
63 x 40	32	16	40	01926	0,09
63 x 32	25	16	40	01927	0,08
75 x 63	50	16	28	01928[1)]	0,09
75 x 50	40	16	28	18685	0,13
75 x 40	32	16	28	18686	0,13
90 x 75	65	16	36	01929[1)]	0,15
90 x 63	50	16	36	18687	0,18
90 x 50	40	16	36	18688	0,19
110 x 90	80	16	16	01930	0,29
110 x 75	65	16	16	18689	0,34
110 x 63	50	16	16	18690	0,33

REDUCTIONS LONG

SLIP CONNECTION

Material: PVC-U, color: grey

D – E x d	DN	PN	Packing	Code	kg
50-40 x 20	15	16	50	01982	0,05
50-40 x 25	20	16	40	01981	0,06
50-40 x 32	25	16	60	01980	0,07
50-40 x 40	32	16	30	01979	0,07
63-50 x 20	15	16	30	01987	0,10
63-50 x 25	20	16	30	01986	0,10
63-50 x 32	25	16	30	01985	0,10
63-50 x 40	32	16	46	01984	0,12
63-50 x 50	40	16	20	01983	0,14
75-63 x 32	25	16	40	01991	0,13
75-63 x 40	32	16	40	01990	0,14
75-63 x 50	40	16	40	01989	0,18
75-63 x 63	50	16	26	01988	0,18
90-75 x 40	32	16	24	01995	0,22
90-75 x 50	40	16	48	01994	0,23
90-75 x 63	50	16	34	01993	0,40
90-75 x 75	65	16	12	01992	0,33
110-90 x 50	40	16	27	01999	0,43
110-90 x 63	50	16	27	01998	0,46
110-90 x 75	65	16	18	01997	0,53
110-90 x 90	80	16	16	01996	0,58

kiwa Quality tested by:
Kiwa Germany, Construction and Building Materials Testing Division

DOUBLE NIPPLE

EXTERNAL THREAD / EXTERNAL THREAD

Material: PVC-U, octagonal, color: grey

threaded	DN	PN	Packing	Code	kg
1½"	40	10	36	02116	0,07

UNIONS 3-PARTS

2 SLIP CONNECTION

color: grey

d	DN	PN	Packing	Code	kg
40	32	16	40	874	0,17
50	40	16	30	875	0,19
63	50	16	12	876	0,37
75	65	16	16	877	0,58
90	80	16	12	879	0,84
110	100	16	5	871	1,64

UNION PARTS

SLIP CONNECTION / EXTERNAL THREAD WITH EPDM O-RING

Material: PVC-U, color: grey

d x threaded	DN	PN	Packing	Code	kg
40 x 1¼"	32	10	36	02356	0,19
50 x 1½"	40	10	30	02357	0,22
63 x 2"	50	10	12	02358	0,43
75 x 2½"	65	10	16	02359	0,51
90 x 3"	80	10	10	02360	1,00
110 x 4"	100	10	4	02361	1,69

UNION PARTS

SLIP CONNECTION / EXTERNAL THREAD WITH ADDITIONAL EPDM O-RING

Material: PVC-U, color: grey

d x threaded	DN	PN	Packing	Code	kg
50 x 1½"	40	16	30	07716	0,25
50 x 2"	40	16	12	26638	0,05
63 x 2"	50	16	12	07717	0,70

UNION PARTS

SLIP CONNECTION / INTERNAL THREAD WITH EPDM O-RING

Material: PVC-U, color: grey

d	DN	PN	Packing	Code	kg
40 x 1¼"	32	10	40	02339	0,17
50 x 1½"	40	10	30	02340	0,21
63 x 2"	50	10	12	02341	0,40
75 x 2½"	65	10	16	02342	0,59

FLANGES, SEALINGS

INSERT PART SLIP CONNECTION (COLLAR BUSH)

Material: PVC-U, color: grey

d	DN	PN	Packing	Code	kg
40	32	16	60	02175	0,05
50	40	16	50	02176	0,05
63	50	16	60	02177	0,08
75	65	16	35	02178	0,16
90	80	16	18	02179	0,21
110	100	16	10	02180	0,47

LAPPED FLANGE

Material: PVC-U, color: grey

d	Number of holes	Ø mm hole	hole circle mm	flange PN	Packing	Code	kg
50	4	18	110	16	16	02032	0,26
63	4	18	125	16	16	02033	0,31
75	4	18	145	16	16	02034	0,47
90	8	18	160	16	16	02035	0,50
110	8	18	180	16	16	02036	0,58

FIXED FLANGE WITH COLLAR BUSH AND SLIP CONNECTION

Material: PVC-U, color: grey

d	Number of holes	Ø mm hole	hole circle mm	Packing	Code	kg
50	4	18	110	16	22565	0,26
63	4	18	125	16	22566	0,37
75	4	18	145	16	22567	0,51
90	8	18	160	16	22568	0,68
110	8	18	180	16	22569	0,88

GASKET FLANGED BUSH

Raw material: EVA, color: transparent

d	Packing	Code	kg
50	20	02061	0,01
63	20	02062	0,01
75	10	02063	0,02
90	20	02064	0,02
110	20	02065	0,04

fitt b-active

PLASTICIZED HARD PVC HOSE

FLEXIBLE (PRICE PER ROLL)

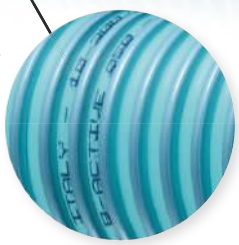

* **INSURANCE GUARANTEE** for all damage caused by the hard PVC hose, which may occur to third parties, including removal of the defective and installation of a new plasticized hard PVC hose

SAFE TRACEABILITY

The marking with a transparent protective layer is permanently indelible.

SECURE STABILITY

SPIRAL PROTECTION BARRIER
Patented

The Spiral Protection Barrier panel acts as a barrier to prevent premature embrittlement through Environmental Stress Cracking (ESC).

THE ADVANTAGES AT A GLANCE

- chlorine and chemical resistant
- extremely resistant to crushing, extremely bendable
- perfect protection against cracking and embrittlement
- supplied with plugs
- can be stored outdoors, safely packed individually in UV foil
- temperature resistance: -10 °C to +60 °C

SECURE FLEXIBILITY

D-SHAPE
Patent pending

The D-Shape spiral provides high resistance to crushing (up to 34 kN/m^2), which, combined with the use of high quality materials, provides increased flexibility and a lower bend radius (up to 125mm).

SAFE PROTECTION

CHLORINE DEFENCE SYSTEM
Patented

The CDS film (Chlorine Defense System) provides increased protection, even against chlorine-containing water and an acidic environment, while ensuring longevity.

color: green

Performance tests (mechanical and chemical) performed internally as well as in collaboration with the University of Padua - DTG laboratory. Certified by TÜV (Test Protocol No. MEC16173.00).

Compliant with the European Directive Re. (EU) 10/2011 for simulators A-B-C.

Note: Tolerance according to UNI EN ISO 1307: 2008. The thermoplastic products are subject to external temperature and retraction deformations, the length tolerance is ± 5%.

Ø (outside x inside)	Operating pressure	Burst pressure	Bend radius	Length	Packing	Pallet quantity	kg	Code
50 x 42 mm	6 bar	18 bar	125 mm	25 m	1	12	18,75	8351
50 x 42 mm	6 bar	18 bar	125 mm	50 m	1	8	37,50	8352
63 x 55 mm	4 bar	12 bar	165 mm	25 m	1	6	24,25	8353

CHLORINE-RESISTANT TUBE

FLEXIBLE (PRICE PER ROLL)

Excellent handling by rigid spiral, lined with a hose protection barrier with patented Spiral Protection Barrier® coextruded in the hose. High resistance to underground loads guaranteed.

Chlorine resistant, flexible, smooth surface,
mold protection, resistant to microorganisms,
calibrated diameter
temperature resistance: -5 °C to +60 °C
color: white / blue

Complies with UNI EN ISO 3994 standard.

The TÜV approval number Z1 16 10 55285 006
is subject to constant control.
European Patent Number 2209850.

The tolerances correspond to the standard
UNI EN ISO 1307: 2008.
The length tolerance is ± 5%.

Ø (outside x inside)	Operating pressure	Burst pressure	Bend radius	Length	Packing	Pallet quantity	kg	Code
50 x 42 mm	5 bar	15 bar	165 mm	25 m	1	12	19,0	8301
50 x 42 mm	5 bar	15 bar	165 mm	50 m	1	8	37,5	8302
63 x 55 mm	4 bar	12 bar	220 mm	25 m	1	6	24,5	8303

PVC ADHESIVE HOSE

FLEXIBLE (PRICE PER ROLL)

Hose for supply systems of whirlpools and swimming pools.
Externally calibrated for a perfect connection with standard connectors.
Spiral hose made of PVC, smooth inside and outside.
Material: PVC
Temperature resistance: -5 ° C to +50 ° C
color: gray

Ø (outside x inside)	Operating pressure	Burst pressure	Bend radius	Length	Packing	Pallet quantity	kg	Code
32 x 25 mm	7 bar	21 bar	100 mm	25 m	1	12	9,6	8223M
40 x 32 mm	7 bar	21 bar	100 mm	25 m	1	16	12,3	8224M
40 x 32 mm	7 bar	21 bar	100 mm	50 m	1	8	34,0	8228M
50 x 42 mm	5 bar	15 bar	165 mm	12 m	1	16	8,2	8230M
50 x 42 mm	5 bar	15 bar	165 mm	25 m	1	12	19,0	8225M
50 x 42 mm	5 bar	15 bar	165 mm	50 m	1	8	36,0	8229M
63 x 55 mm	4 bar	12 bar	220 mm	25 m	1	6	24,0	8226M
75 x 65 mm	2,5 bar	7,5 bar	400 mm	25 m	1	3	33,0	8227M
90 x 80 mm	3 bar	9 bar	310 mm	25 m	1	12	39,0	8231M

8231M NEW

PIPES PN 10, PN 16

PIPE PN 10 PVC-U

- for sticking
- length 5 m: one sided slip connection (price per 5 m)
- length 2,5 m: smooth ends on both sides (price per 2,5 m)

color: grey

	d	wall thickness mm	tube length in m	Packing	Code	kg
tube length 2,5 m	50	2,4	2,5	1	8195.2,5m	1,4
	63	2,4	2,5	1	8196.2,5m	1,5
	75	2,9	2,5	1	8197.2,5m	1,6
tube length 5 m	40	1,9	5	1	8194	2,5
	50	2,4	5	1	8195	2,8
	63	2,4	5	1	8196	3,0
	75	2,9	5	1	8197	8,0
	90	3,5	5	1	8199	8,0
	110	4,2	5	1	8190	9,0

Further diameter available on request.

PIPE PN 16 PVC-U

- for sticking
- length 5 m: one sided slip connection (price per 5 m)
- length 2,5 m: smooth ends on both sides (price per 2,5 m)

color: grey

	d	wall thickness mm	tube length in m	Packing	Code	kg
tube length 2,5 m	50	3,7	2,5	1	8295.2,5m	2,0
	63	3,8	2,5	1	8296.2,5m	2,1
	75	4,5	2,5	1	8297.2,5m	2,2
tube length 5 m	40	3,0	5	1	8294	3,5
	50	3,7	5	1	8295	3,9
	63	3,8	5	1	8296	4,2
	75	4,5	5	1	8297	11,2
	90	5,4	5	1	8299	11,2
	110	6,6	5	1	8290	12,6

Further diameter available on request.

GLUE, CLEANER

MIDA FIX 3000

UNIVERSAL SEALANT AND ADHESIVE

Application for stone (non-porous), concrete, natural stone, plaster, polycarbonate, PSPU, PVC, various plastics, mirrors, glass, ceramic tiles, enamel, copper, lead, zinc, aluminum, stainless steel, wood

Made in Germany

FEATURES:

- for above and below water applications
- very high mechanical strength
- for stress-compensating bonding
- free from isocyanate, solvents, phthalate and silicone
- weather and aging resistant
- resistant to salt water and chlorine
- fungus and mold retardant effect
- suitable for pond liners
- natural stone compatible
- can be recoated, painted over (with emulsion paints)
- grindable
- smell neutral
- shore hardness 60
- 300 % elongation at break (no expansion joints)
- temperature resistance of –40°C to +100°C
- permanently elastic
- fast curing
- colorfast
- no shrinkage

CONTENT: 440 GRAMM (CARTRIDGE)

Color	Packing	Code	kg
White	10	MF-3000W	0,57
Grey	10	MF-3000G	0,57
Black	10	MF-3000B	0,57
Transparent	10	MF-3000t	0,57

NEW

Made in Germany

CONTENT: 60 GRAMM (TUBE)

– only available in 60 g –

Color	Packing	Code	kg
white	10	MF-60W	0,14

GRIFFON UNI-100 PVC SOLVENT CEMENT FOR PVC

Thixotropic and fast curing adhesive for rigid PVC. For solvent cementing of pipes, sockets and fittings with small and larger adhesive gap (gap filling) in pressure and drainage systems. Suitable for diameters ≤ 315 mm, max. 16 bar (PN 16), tolerance max. 0,8 mm gap fitting / max. 0.2 mm interference fit. Features: with special brush, quick closure, quick, thixotropic, gap filling, temperature resistance 60°C, briefly up to 95°C, viscosity 2500 mPa/s, solids content: about 23%, density: 0,97 g/cm³
color: grey (transparent)

Article	Packing	Code	kg
125 ml Tube	30	8000	0,125
250 ml Can with brush	24	8001	0,25
500 ml Can with brush	12	8002	0,50
1.000 ml Can with brush	8	8003	1,00

GRIFFON WDF-05 PVC SOLVENT CEMENT FOR FLEXIBLE HOSES AND PVC

Blue, thixotropic and very fast curing adhesive. For solvent cementing flexible hoses (PVC), tubes and pipes, sockets and fittings made of rigid PVC with small and larger adhesive gap (gap filling) in pressure and drainage systems. Extremely suitable for i.a. swimming pools, hot tubs and applications in wet environments. Suitable for diameters ≤ 160 mm, max. 16 bar (PN 16), tolerance max. 0.8 mm, Gap fitting (flexible hoses max. 0,3 mm) / max. 0,2 mm interference fit. Features: with special brush and quick closure, very fast curing, thixotropic, gap filling, temperature resistance: 60°C, peak load 95°C, viscosity: ca. 1500 mPa/s, solids content: about 17%, density: 0,99 g/cm³
color: blue (transparent)

Article	Packing	Code	kg
125 ml Can with brush	10	8103	0,125
250 ml Can with brush	12	8100	0,25
500 ml Can with brush	12	8101	0,50
1.000 ml Can with brush	8	8102	1,00

DRYING TIMES

Ø	16 – 50 mm			63 – 110 mm			125 – 160 mm		
°C	5 bar	10 bar	16 bar	5 bar	10 bar	16 bar	5 bar	10 bar	16 bar
5 °C–15 °C	30 min.	1 hour	4 hour	1 hour	2 hour	8 hour	4 hour	16 hour	32 hour
> 15 °C	15 min.	30 min.	2 hour	30 min.	1 hour	4 hour	2 hour	8 hour	16 hour

GRIFFON CLEANER

For cleaning and degreasing of surfaces of bonded pipes, sockets and fittings which are made of rigid PVC, PVC, CPVC and ABS. Also suitable for the removal of non-cured adhesive residues and for cleaning brushes and tools. Using in combination with Griffon Cleaner Cloth. Not suitable for dilution of PVC, CPVC and ABS glue. Features: universal, very strong cleaning effect, viscosity: about 97 mPa/s
color: transparent

Article	Packing	Code	kg
125 ml Can	20	8200	0,125
500 ml Can	12	8201	0,50
1.000 ml Can	6	8202	1,00

PP PIPE CLAMP WITH STRAP

d	Packing	Code	kg
50	100	8215	0,03
63	50	8216	0,04
75	40	8217	0,07
90	25	8219	0,12
110	30	8210	0,14
125	25	8211	0,17
140	15	8212	0,27
160	10	8213	0,32
200	8	08919	0,45
225	4	10958	0,88

GRIFFON KOLMAT® FIBRE SEAL >180° ADJUSTABLE

Kolmat® Fibre Seal is unique when it comes to the adjustment of threaded connections. A fitting, connection, or tap can be installed in the proper position without any risk of leakage. Even when readjusted more than 180°, the connection remains 100 % sealed.

FEATURES: universal, fibre-reinforced, adjustable > 180°, removable

Dimensions	Packing	Code	kg
14 mm x 15 m	30	8030	0,15

KOLMAT® PLASTIC

SEALANT FOR CONICAL AND CYLINDRICAL
SYNTHETIC THREADED CONNECTIONS

Kolmat® Plastic is a, for the adjustment of threaded connections, unique product. Without the risk of leaks, versions, Connections or taps are mounted in the correct position. Even when turning back more than 180 °, the connection remains 100 % tight.
Temperature resistance: from -50 °C to +120 °C,
chemical base: silicone elastomer (alkoxy), color: white

Article	Packing	Code	kg
KOLMAT Plastic	6	8031	0,4

WIRE SAW FOR SAWING PLASTIC PIPES

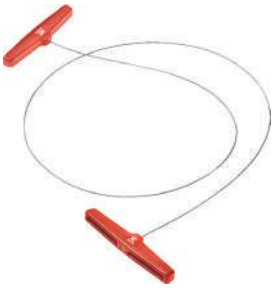

Ideal for sawing in difficult to reach places. For plastic pipes made of PVC, PVC-C, PP and PE. Thin rope with rough cut for fast applications, with strong handles, length: 90 cm.

Article	Packing	Code	kg
Wire saw	1	8036	0,4

DEBURRING TOOL

FOR CHAMFERING PLASTIC PIPES

For plastic pipes made of PVC, PVC-C, ABS, PP and PE. Suitable for diameter 16 ≤ 63 mm. Creates a bevelled corner of 15 °, prevents the leakage of adhesives

Article	Packing	Code	kg
Deburring tool	1	8035	0,4

PVC GLUE BLUE

Glue for connecting piping elements from elastic PVC and rigid PVC U-PVC) used for pool installation. Suitable for water supply and discharge lines with a diameter of up to 100 mm. Does not run down on vertical surfaces.

NEW

Article	Packing	Code
125 ml can with brush	12	8110
250 ml can with brush	12	8111
500 ml can with brush	12	8112

PVC UNIVERSAL CLEANER

Fermit pool PVC Universal Cleaner improves the bonding properties by loosening the surface layer and is perfectly suitable for "pool fermit PVC Glue Blue" and "pool fermit PVC Glue PRO" glues as well as any other glue for UPVC und elastic PVC.

NEW

Article	Packing	Code
125 ml bottle	12	8205
250 ml bottle	12	8206
1.000 ml bottle	6	8207

LECK-FIX

Leck-Fix closes minor leaks in swimming pools made from different materials (concrete, polyester, acrylic, sealing membrane) and underground pipes. Leaks of 0.5 m3 to 0.8 m3 in pools between 50m3 and 60m3 can be treated per day (corresponds to a falling water level of approx. 2 cm in a pool of 10m x 5m). In the case of bigger damages, further measures are required.

NEW

Article	Packing	Code
Leck-Fix 1l	6	8040

PLASTIC THREAD SEALANT

Fast and clean. Thread sealant in a tube. Suitable for plastic/plastic (PVC, PVC-C, PP, ABS, PE) and mixed metal/plastic connections.

NEW

Article	Packing	Code
100g tube	6	8041

REPAIR COMPOUND FOR LEAKAGES

Two-component epoxy sealant in the form of modelling clay for puttying, repairing and for mounting all rigid and semi-rigid plastics. Suitable for plastics such as PVC, PVC-C, ABS (PE, PP and PTFE excepted) and most standard materials (glass, wood, metal, copper, concrete). Once cured, the product can be processed, drilled, sawn, filed and painted like metal.

NEW

Article	Packing	Code
Repair compound for leakages	6	8042

SILICON FITTING GREASE

NEW

Fittings grease based on 100 % silicon oil and inert filler materials. For greasing stopcocks and valves in pools, irrigation systems and installations by the sea. Prevents lime deposits from water and greased parts. Water-repellent: suitable for devices transporting warm, aqueous solutions.

Article	Packing	Code
30g tube	40	8044

PTFE TEFLON TAPE

NEW

Thread sealing tape from 100% pure, unsintered PTFE
- Prevents rust
- Removable, resistant against fungal attacks

Article	Packing	Code
Set of 2 each 12 m	250	8043

ANTI-CORROSION SPRAY

NEW

Care, protection and cleaning of glossy and matt stainless steel. Ideal for our heat pump MIDA.Maxx, pool ladders, stainless steel showers, Outdoor showers or pool edges of stainless steel basin.

Article	Packing	Code
400ml Spray	12	8048

360° BEND AND DREAM CANNULA

NEW

360 ° kink and rotary cannula, suitable for all standard cartridges.
- Just bring silicone into every corner
- On blister strip: 12 bags of 2 needles per bar

Article	Code
Bag	8050

EXTENSION FOR CARTRIDGE TIPS

NEW

Up to 20 cm (2 x 10 cm) more range.
- Fits all standard cartridges and hoses
- Can be combined with the fermit 360 ° buckling and rotating cannula
- Bring silicone into every corner
- On blister strip: 12 bags of 2 tips per bar

Article	Code
Bag	8051

JOINT TOOL

NEW

Highly flexible jointing tool for professionals and DIY enthusiasts.
- 3-piece set for permanently beautiful joints
- For joints of 5 mm, 8 mm, 10 mm, 16 mm, 90 ° and round joints
- On blister strip: 12 bags of 3 tools per bar

Article	Code
Bag	8052

07

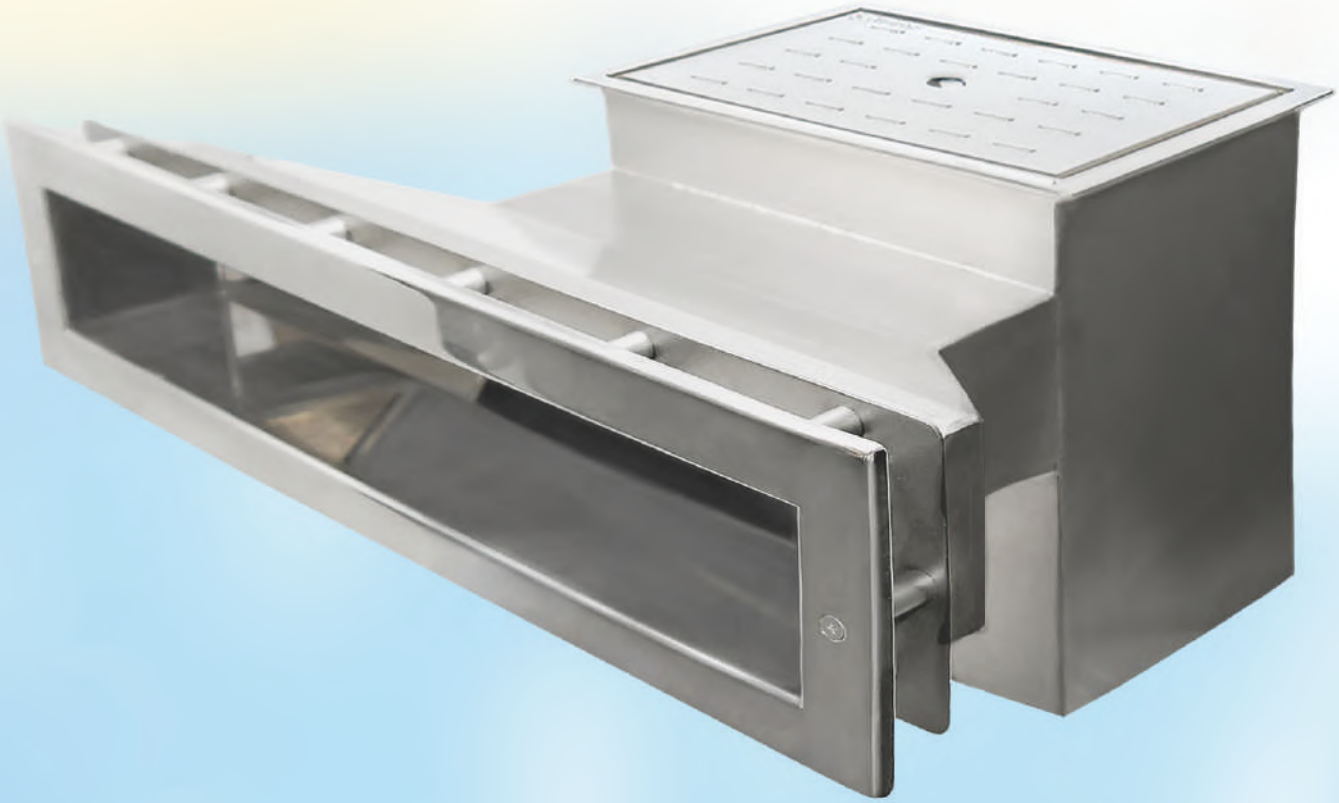

MOUNTING PARTS

Elegant skimmer, floor drains, inlet nozzles, wall ducts - With these products, a pool works best. With built-in parts from MIDAS whether plastic, stainless steel, gunmetal or bronze you choose quality. With us you will also find heat-insulating polystyrene stones for pool construction, swimming pool slides in different colors and much more.

OVERVIEW

130	MIDA.Slim Premium
131	MIDA.Slim
132	ABS Skimmer Mini / Standard / Wide mouth De Luxe
133	Wall Inlets Nozzles, Floor Inlets, Floor Drains
135	Wall Conduits Stainless Steel + ABS
136	Multiflow- adjuster, Grating
135	Grating plate, Corner tile 90°, Guide rail, Retractor
138	swimming pool foils an Accessories
140	Pool cover
144	Ladders (V2A/AISI 304)

ELEGANCE IN STAINLESS STEEL

NEW

The skimmer in elegant design meets the highest standards and are a guarantee for visually successful solutions. Owner of stainless steel products are justifiably proud of the extravagance of shimmering silver surfaces.
The harmonious overall impression is increased if further installation parts are used in the same material.
But stainless steel is not only a good-looking material, it also excels in its high resistance to chemicals and aging.

MIDA.Slim Premium STAINLESS STEEL

COMPLETE MADE OF STAINLESS STEEL V4A/AISI 316

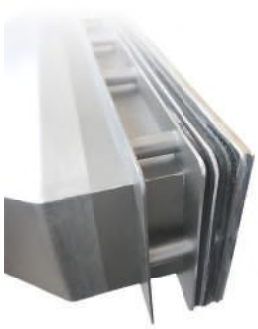

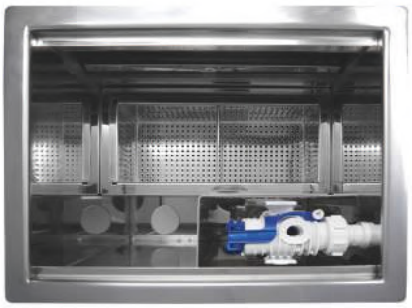

- Suction opening: 502 x 90 mm (560 x 144 mm outside)
- This new custom made by massive construction and convincing polished viewing surfaces
- high quality surface extractor for a great look
- with flange, gaskets, screw set and cover for mounting in **Foil, GRP, PP and segment basins**
- incl. device for water level regulator No. 40.01, protected against contamination, such as foliage
- Installation depth complete: 495 mm
- Deep skimmer neck: 265 mm (bridges a complete pool wall of 24)
- Connection: 2" internal thread (vertical departure)
- 50 mm overflow connection (vertical Finish) for PVC pipe with individual height
- Flow: 10–14 m^3/h
- large-volume skimmer basket 280x110x100 mm
- ncl. height-adjustable lid frame (0-50 mm)
- noble front panel covers flange and seals

Hinweis: Gemäß der Trinkwasserverordung ist für die Frischwassernachspeisung ein Systemtrenner nach DIN EN 1717 Kategorie 5 zu installieren.

Article	Code	kg
MIDA.Slim Premium	0255	17

WATER LEVEL CONTROLLER UNIVERSAL

Mechanical water level controller, side water connection 3/8" made of brass, low noise

optional accessories	Code	kg
Water level controller universal	40.01	0,36

MIDA.Slim ABS PLASTIC

- suction opening: 498 x 84 mm (550 x 135 mm outside)
- convinces with new design and modern functionality
- robust, made of high-quality ABS
- incl. cover for liner pools or with flange, gaskets, scews and cover for installation in liner, fiberglass, polypro-pylene and segment basins
- with integrated threaded sleeves to fix the screws of flange
- color: white
- depth: 620 mm
- depth skimmer neck: 370 mm
- connection: 2" and 1½" inner thread (vertical outlet)
- flow-rate: 7 m^3/h
- device for overflow connection 32 mm

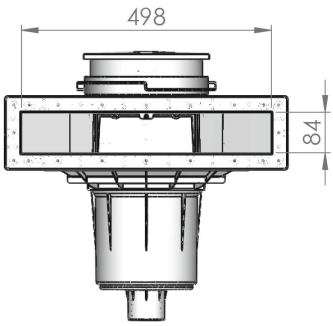

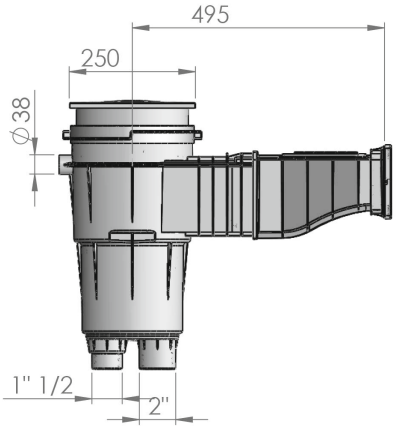

0254-E1

Article	Code	kg
Slim Line Skimmer ABS plastic for liner pools (incl. flange)	0254	3,2
Cover made of stainless steel V4A / AISI 316L for MIDA.Slim Line Skimmer ABS, Suction opening: 495 x 78 mm Dimensions: 560 x 140 x 17 mm	0254-E1	

ABS MINI SKIMMER

MINI skimmer ABS, complete set, Ø 32 mm and Ø 38 mm hose connection, incl. inlet nozzle, suction plate (skim vac), cover plate, basket, inlet nozzle and teflon tape, supplied with flange, gaskets and screws for suitable all **steel wall pools**, robust construction, Flow-rate: 5 m³/h, color: white.

Suitable for	Code	kg
Steel wall pools	620-S	2,0

OPTIONLAL EQUIPMENT

Article	Code
Cover (A)	620-S-E1
Vac plate/Vacuum disk (B)	620-S-E2
Basket with plastic handle (D)	620-S-E3
Flap (E)	620-S-E4
Gasket (G)	620-S-E5

A Cover
B Vac Plate
C Screw
D Basket with plastic handle
E Weir
F Skimmer support
G Double layer gasket
H Face plate

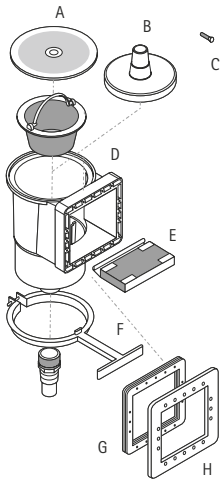

ABS STANDARD SKIMMER

Surfaces is an skimmer **for concrete, liner and prefabricated pools**, skimmer with universal solvent socket 50 d (closed) and 1½" IG 2" AG, overflow connection Ø 40 mm, lid opening 208 x 140 mm, Flow-rate: 5 m³/h, color: white.

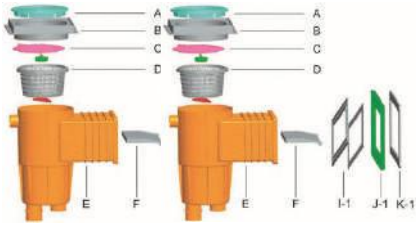

0249 0249F

A Skimmer Lid
B Skimmer Collar
C Vac Plate
D Skimmer Basket
E Skimmer Body
F Skimmer Weir
I-1 Gasket
J-1 Face Flange (for Vinyl Pools)
K-1 Face Flange Cover (for Vinyl Pools)
L-1 Face Flange Cover (for Concrete Pools)

Image shows #0249FG

Suitable for	Code	kg
Concrete Pools	0249	5,3
Liner/prefabricated pools (Flange)	0249FG	6,0

ABS WIDE MOUTH SKIMMER DELUXE

Surfaces is an skimmer **for liner and prefabricated pools** , skimmer with universal female solvent socket 50 d (closed) and 1½" IG 2" AG, overflow connection Ø 40 mm, lid opening 353 x 167 mm, Flow-rate: 5 m³/h, color: white.

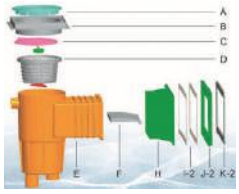

A Skimmer Lid
B Skimmer Collar
C Vac Plate
D Skimmer Basket
E Skimmer Body
F Skimmer Weir
H Wide Mouth
I-2 Gasket
J-2 Face Flange (for Vinyl Pools)
K-2 Face Flange Cover (for Vinyl Pools)
L-1 Face Flange Cover (for Concrete Pools)

Suitable for	Code	kg
Liner/prefabricated pools (Flange)	0250FG	7,0

INFLATING TIGHTS WITH FLANGE SET

Made in Germany

2" external thread, with cover and ball 4 x 8 mm
Material: Stainless steel V4A / AISI 316L

Suitable for	Packing	Material	Lenght	Code
Liner pool (including flange set)	1	gunmetal*	40 mm	03.22
Liner pool (including flange set)	1	bronze**	40 mm	03.22-B
Liner pool (including flange set)	1	gunmetal*	70 mm	03.24
Liner pool (including flange set)	1	bronze**	70 mm	03.24-B

INLET NOZZLES WITHOUT FLANGE SET

Made in Germany

2" external thread, with cover and ball 4 x 8 mm, material: stainless steel V4A / AISI 316L

Suitable for	Packing	Material	Lenght	Code
Tiled and prefabricated pools (without counter replacement)	1	gunmetal*	40 mm	03.20
Tiled and prefabricated pools (without counter replacement)	1	bronze**	40 mm	03.20-B
Tiled and prefabricated pools (without counter replacement)	1	gunmetal*	70 mm	03.21
Tiled and prefabricated pools (without counter replacement)	1	bronze**	70 mm	03.21-B

Made in Germany

COUNTERPIECE FOR PREFABRICATED BASIN

2" internal thread, incl. seal

Suitable for	Packing	Material	Code
Counterpiece for prefabricated basin	1	gunmetal*	03.25

INLETS FLANGED PARTS

Made in Germany

With cover and ball 4 x 8 mm, material: stainless steel V4A / AISI 316L
for wall ducts # 03.32, 03.32-B, 03.33 and 03.33-B

Suitable for	Packing	Material	Code
Liner pool (including flange set)	1	gunmetal*	03.34
Liner pool (including flange set)	1	bronze**	03.34-B

FLOOR DRAIN 90 ° OUTLET

Made in Germany

1½" and 2" internal thread, with anti-vortex cover Ø 168 mm,
Material: Stainless steel V4A / AISI 316L.

Suitable for	Packing	Material	Code
1½" Liner pool (including flange set)	1	gunmetal*	03.11-F
1½" Liner pool (including flange set)	1	bronze**	03.11-FB
1½" Concrete pool	1	gunmetal*	03.11-B
1½" Concrete pool	1	bronze**	03.11-BB
2" Liner pool (including flange set)	1	gunmetal*	03.19-F
2" Liner pool (including flange set)	1	bronze**	03.19-FB

* not suitable for salt electrolysis ** max. salt concentration: 6%

FLOOR DRAIN VERTICAL EXIT

1½" internal thread, with anti-vortex cover Ø 168 mm
Material: Stainless steel V4A / AISI 316L, Ø 168 mm

Made in Germany

Suitable for	Packing	Material	Code
Liner pool (including flange set)	1	gunmetal*	03.18-F
Liner pool (including flange set)	1	bronze**	03.18-FB
Prefabricated pool (including counter flange)	1	gunmetal*	03.18-FE
Prefabricated pool (including counter flange)	1	bronze**	03.18-FEB
Concrete pool	1	gunmetal*	03.18-B
Concrete pool	1	bronze**	03.18-BB

SUCTION FITTINGS

Plug-in base element 2" AG, with cover made of stainless steel V4A / AISI 316L

Made in Germany

Suitable for	Packing	Material	Lenght	Code
Liner pool (including flange set)	1	gunmetal*	40 mm	03.26-F
Liner pool (including flange set)	1	bronze**	40 mm	03.26-FB
Tiled and prefabricated pools (without counter replacement)	1	gunmetal*	40 mm	03.26-FE
Tiled and prefabricated pools (without counter replacement)	1	bronze**	40 mm	03.26-FEB
Tiled and prefabricated pools (without counter replacement)	1	gunmetal*	70 mm	03.27-FE
Tiled and prefabricated pools (without counter replacement)	1	bronze**	70 mm	03.27-FEB

03.26-F

03.26-FE / 03.27-FE

Made in Germany

ACCESSORY BASE ELEMENTS

Article	Packing	Material	Code
Hose nozzle 38 mm with O-ring	1	gunmetal*	03.28
Hose nozzle 38 mm with O-ring	1	bronze**	03.28-B
Sealing plug with O-ring	1	V4A/AISI 316L	03.29
Counterparts 2" for prefabricated pools (including seal)	1	gunmetal*	03.25

03.28

03.29

03.25

WALL CONDUIT

2 x 1½" and 2 x 2" internal thread, for tile and liner pools

Made in Germany

Material	Packing	Lenght	Code
2 x 1½" Gunmetal*	1	240 mm	03.00
2 x 1½" Bronze**	1	240 mm	03.00-B
2 x 2" Gunmetal*	1	240 mm	03.32
2 x 2" Bronze**	1	240 mm	03.32-B
2 x 2" Gunmetal*	1	300 mm	03.33
2 x 2" Bronze**	1	300 mm	03.33-B

* not suitable for salt electrolysis ** max. salt concentration: 6%

INLET NOZZLE MULTI-FLOW ADJUSTABLE

Adjustable inlet nozzle for screwing with screw collar, made of ABS, **for concrete pools**, size and flow rate with cherry adjustable, ball diameter 14-20-25, for prefabricated pools delivery with gaskets and nuts, max. recommended flow rate 2,2 m³/h - 4,5 m³/h - 7,0 m³/h, **for liner pools** additionally with flange and stainless steel screws, color: white

Suitable for	Connections	Packing	Code	kg
Concrete pools	d 50 mm/2" External thread	24	0295	0,18
Prefabricated pools	d 50 mm/2" External thread	24	0295F	0,19
Liner pools	d 50 mm/2" External thread	12	0330	0,38

0295

0295F

0330

2" GROUND INLET NOZZLE ADJUSTABLE

Made of ABS, 360° regulation of the fresh water flow, **for concrete pools** max. recommended flow rate is 12,0 m³/h, chemical resistant, supplied with gaskets & bolts, **for liner/prefabricated pools** additionally with flange, connections inside with bonded socket joint d = 50 mm and outside 2" External thread, color: white

Suitable for	Connections	Packing	Code	kg
Concrete pools	d 50 mm/2" External thread	1	2825	0,45
Liner/prefabricated pools	d 50 mm/2" External thread	1	2825F	0,45

2825

2825F

2" FLOOR DRAIN

Made of ABS, Ø 170 mm, **for concrete pools**, with side 2" IG-connection, cover is detachable, max. flow rate 15 m³/h, min. 2 floor drains per pool are recommended, supplied with gaskets & bolts, **for liner/prefabricated pools** additionally with flange, color: white.

Suitable for	Connections	Packing	Code	kg
Concrete pools	2" IG	4	1467	1,6
Liner/prefabricated	2" IG	4	1467F	1,0

2" WALL CONDUIT OF PVC

For concrete pools, 300 mm long, rear side 2" external thread, color: grey

Front side	Packing	Code	kg
2" Internal thread connection	6	0324	0,5

WALL CONDUIT OF STAINLESS STEEL

For concrete pools, V2A/AISI 304

Length mm	Internal-thread	Packing	Code	kg
300	1½"	1	09.01	0,65
400	1½"	1	09.02	0,90
300	2"	1	09.03	0,90
400	2"	1	09.04	1,20

MULTIFLOW-ADJUSTER

For simple regulating of flow rate at the inlet nozzle, suitable only for multiflow type adjustable

Article	Packing	Code	kg
Multiflow-adjuster, blue	1	0299	1,0

GRATING FOR ROUND MODEL

Made of polypropylen, connection via click system, approx. 45 pieces per meter

Heigth x width mm	Packing	Code	kg
22 x 195	470	350	0,034
22 x 245	320	351	0,043
22 x 295	300	352	0,060
22 x 335	250	353	0,068
35 x 195	450	354	0,037
35 x 245	300	355	0,047
35 x 295	290	356	0,067
35 x 335	250	357	0,072

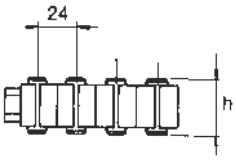

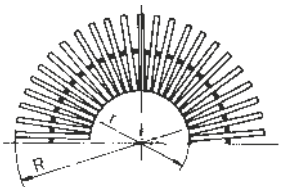

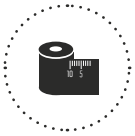

Art. / Code	h (mm)	L (mm)	L1 (mm)	R (mm)	r (mm)
# 350	22	200	195	445	250
# 351	22	250	245	545	300
# 352	22	300	295	645	350
# 353	22	340	335	785	450
# 354	35	200	195	445	250
# 355	35	250	245	545	300
# 356	35	300	295	645	350
# 357	35	340	335	785	450

GRATING

Made of polypropylen, the grating is chained with cable, approx. 49 pieces per meter

Heigth x width mm	Packing	Code	kg
22 x 195	340	358	0,035
22 x 245	305	359	0,043

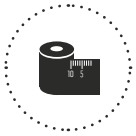

Art. / Code	h (mm)	L (mm)	L1 (mm)
# 358	22	200	195
# 359	22	200	245

FASTENING CABLE

Stainless steel V4A/AISI 316 (14571), plastic cover ø 2,5 mm, to chain the grating, please specify the wanted cable length, pricing per meter

Article	Packing	Code	kg
Fastening cable stainless steel	1	360	21,0
Endpiece for cable fixing	1	361	1,50

GRATING PLATE

Made of polypropylen, the plates are connected with a clip-system. 5 pieces = 0,975 m

Heigth x width mm	Packing	Code	kg
22 x 245	52	363	0,438
22 x 295	45	364	0,513
22 x 335	38	365	0,579

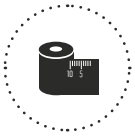

Art. / Code	h (mm)	L (mm)	L1 (mm)
# 363	22	250	245
# 364	22	300	295
# 365	22	340	335

CORNER TILE 90°

Made of polypropylen

Heigth x width mm	Packing	Code	kg
22 x 195	4	370	0,70
22 x 245	4	371	0,90
22 x 295	4	372	1,20
22 x 335	4	373	1,43
35 x 195	4	374	0,80
35 x 245	4	375	1,05
35 x 295	4	376	1,33
35 x 335	4	378	1,55

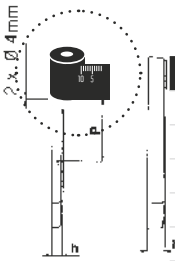

Art. / Code	A (mm)	H (mm)	L (mm)	P (mm)
# 370	245	22	195	127
# 371	295	22	245	127
# 372	345	22	295	127
# 373	385	22	335	127
# 374	245	35	195	-
# 375	295	35	245	-
# 376	345	35	295	-
# 378	385	35	335	-

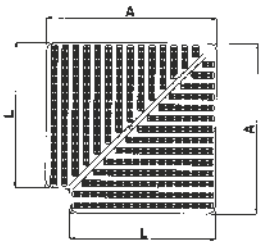

GUIDE RAIL

FOR GRATINGS AND RAILINGS

Made of polypropylen, for all fitting over flow channels, useful double-sided. For gratings with heigth of 22, 24 & 35 mm, fixed length 2,0 m, inside dimension 24 x 37 mm

Article	Packing	Code	kg
Guide Rail	25	379	0,56

RETRACTOR

Mobile retractor for swimming pool liner, aluminium, total length: 6,30 m

Article	Code	kg
Mobile retractor	2321	11,00

THE PERFECT LOOK

POOL SURFACE | MADE IN GERMANY

In large measure the pool linings determine not only the pool look, but also the appearance of the entire pool area. The best way to get a long term waterproof and easy to clean swimming pool, into apply a reinforced swimming- pool membrane.
Besides, numerous combinations and a wide color spectrum are conceivable. Color, shape, material, surface feel and appearance of the pool liner affect significantly the overall look and decide about the comfort factor.

AVAILABLE MEMBRANE COLORS – UNICOLOR

White	Adriatic	Light Blue	Sand	Light Grey	Dark Grey	Black

In case of print technical reasons color deviations are possible.

BASIC LINE

WATERTIGHTNESS 15 YEARS Warranty

Dimensions
Thickness: 1.5 mm
Width: 1.65 / 2.00 m
Roll length: 25m Packing: 8 per pallet
Max. water temperature: 32°

REINFORCED SWIMMING POOL MEMBRANE BASIC LINE – CLASSIC

Reinforced swimming pool membranes are the perfect material for the lining of fixed pools of all shapes and sizes in the indoor and outdoor area. Extremely tear-resistant, durable and resistant to weathering, cold, fungi and bacteria.
Suitable for any surface.

Roll Length 25m x 1.65 m (width)

Color	Code
White	20.045
Adriatic Blue	20.061
Light Blue	20.403
Sand	20.405
Light Grey	20.073
Dark Grey	20.529
Black	20.579

Roll-Length 25m x 2.00 m (width)

Color	Code
White	20.047
Adriatic Blue	20.063
Light Blue	20.404
Sand	20.406
Light Grey	20.072
Dark Grey	20.628

PREMIUM LINE

WATERTIGHTNESS 15 YEARS Warranty

Dimensions
Thickness: 1.5 mm
Width: 1.65 / 2.00 m
Roll length: Packing: 8 per pallet
Max. water temperature: 32°

REINFORCED SWIMMING POOL MEMBRANE PREMIUM LINE – SUPRA

Surface Protection

The high-quality surface protects against stain and discoloration. Additionally SUPRA is antimicrobial, stable against UV radiation, cold-resistant, tear-resistant and very durable.

Roll Length 25 m x 1,65 m (width)

Color	Code
White	20.049
Adriatic Blue	20.410
Light Blue	20.052
Sand	20.051
Light Grey	20.055
Dark Grey	20.786

Roll Length 25 m x 2,00 m (width)

Color	Code
White	20.048
Adriatic Blue	20.409
Light Blue	20.053
Sand	20.054
Light Grey	20.074
Dark Grey	20.910

PEARL REINFORCED SWIMMING POOL MEMBRANE

Printed & Special Surface Light Effect

EXCLUSIV LINE

WATERTIGHTNESS 15 YEARS Warranty

PEARL is a pearlescent coated reinforced swimming pool membrane which is resistant to most stains and UV radiation. The amazing pearlescent effect - depending on the light source, or degree of illumination -
realizes an unique, vibrant and colorful iridescent play of colors. PEARL Membranes are weather, cold-resistant and anti-microbial.

WHITE PEARL

BLACK PEARL

BLUE PEARL

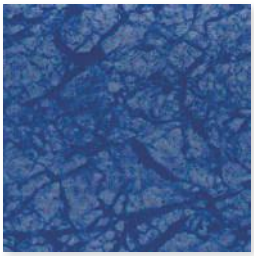

SAND PEARL

In case of print technical reasons color deviations are possible..

Roll Length 25m x 1.65 m (width)

Color	Code
White Pearl	20.787
Black Pearl	20.776
Blue Pearl	20.777
Sand Pearl	20.984

Dimensions
Thickness: 1.6 mm
Width: 1.65 m
Roll length: 25 m
Max. water temperature: 33°

REINFORCED SWIMMING POOL MEMBRANE Elite®

elite STRONG. HEALTHY. STAIN FREE. MADE IN GERMANY Superior pools.

NEW

Elite® is the first phthalate-free reinforced swimming pool membrane on the market. It´s extremely stain resistant, scratch resistant, UV-resistant, chlorine resistant, easily weldable and easy to clean. The world novelty for a clean environment and for a durable pool. It is the world's healthiest choice for you and your family. The membrane has a very special surface protection which resists cosmetics, sun cream, etc., that means less cleaning needed. With elite® the pool retains its original color for many years, stays fresh, clean and invites you for a swimming.

Deep Sea

Blue Sky

Sand Beach

Arctic White

Grey Rock

Black Stone

Roll length 25m x 1.65 m (width)

Color	Code
Deep Sea	20.068
Blue Sky	20.069
Sand Beach	21.070
Arctic White	20.071
Grey Rock	20.173
Black Stone	20.122

Roll length 25m x 2.00 m (width)

Color	Code
Deep Sea	20.119
Blue Sky	20.118
Sand Beach	21.120
Arctic White	20.117
Grey Rock	20.121
Black Stone	20.123

EXCLUSIV LINE

WATERTIGHTNESS 15 YEARS Warranty

Max. water temperature: 35°

DIMENSIONS
Thickness: 1,5 mm
Width: 1,65 m
Roll length: 10 m
Packing unit: 15 rolls/pallet

FABRIC REINFORCED ANTI SLIP MEMBRANE

Anti slip protection for stairs and children pools

ROLL-SIZE 10 m (length) x 1,65 m (width) – (15 % expences for cutting for neaded length).

Color	Code	kg
White	20.765	34,32
Adriatic blue	20.772	34,32
Light blue	20.768	34,32
Sand	20.766	34,32
Grey	20.767	34,32
Anthracite	20.771	34,32
Black	20.770	34,32

LIQUID PVC

Seam sealer for fabric reinforced swimming pool linings. Package size: 950 ml (can). Also available separately.

Color	Packing	Code	kg
White	6	21.054	0,95
Navy blue	6	21.047	0,95
Adriatic blue	6	21.048	0,95
Light blue	6	21.053	0,95
Sand	6	21.056	0,95
Grey	6	21.046	0,95
Anthracite	6	21.154	0,95
Black	6	21.190	0,95
Transparent	6	21.055	0,95

PACKING
packing unit: 30/pallet
Exterior angle, strips,
Interior angle:
packing unit: 10 / Pk

PVC COATED METALS / PROFILES

For the assembling of fabric reinforced swimming pool linings
Thickness of liner composite panel: 1,2 mm

Article	Color	Dimensions (mm)	Code	kg
Panel	blue	2000 x 1000	21.063	10,00
External angle	blue	70 x 30 x 2000	21.068	1,00
Internal angle	blue	70 x 30 x 2000	21.067	1,00
Strip	blue	70 x 2000	21.071	1,00

SEPARATION AND PROTECTION FLEECE / GEO TEXTILE

Separation and protection fleece available in 300 g/m² and 500 g/m², thermally solidified polyester fibers, drilling and screw-proof, rot proof, vapor permeable, film and bitumen compatible, color: white. Also available separately. BZ-DIN 4102.

SIZE: 1,50 METER – 75 m²

Article	Quality	Packing	Code	kg
Fleece	300g/m²	6 rolls/pallet	20.500	22,5

SIZE: 2,00 METER – 100 m²

Article	Quality	Packing	Code	kg
Fleece	300g/m²	6 rolls/pallet	20.501	30,00
Fleece	500g/m²	5 rolls/pallet	20.502	50,00

DIMENSIONS
Thickness: 2 mm (300 g/m²)
Thickness: 4 mm (500 g/m²)
Width: 1,50 / 2,00 m
Roll length: 50 m

ACCESSORIES FOR PROFESSIONAL INSTALLATION

Swimming pools membranes can be used to house indoor and outdoor swimming pools in every pool shape and size. This applies to new construction as well as to the rehabilitation of existing swimming pools with subfloors made of concrete, walls, wood, steel, aluminum or polyester. The right accessory for laying is a must, so that the lining of the swimming pool is professionally executed.

NEW NEW

21.000

21.382

21.381

21.039

8045

8046

NEW

Article	Packing	Code
Spray bottle, 500 ml	5	21.000
Drive fasteners short, 20,3 mm	12 Pack à 200 Stk.	21.381
Drive fasteners long, 35 mm	12 Pack à 100 Stück	21.382
Welding agent THF, 1.000 ml	6	21.039
Non-woven adhesive Pro, 5kg bucket	1	8045
Spray adhesive for pool fleece, 500 ml	12	8046
Foil repair kit 30 ml (special underwater glue)	1	31273

31273

POOL COVER

NEU

(Re)Cover's product range consists of Pool Cover Slats in PVC and Polycarbonate Tri Extrusion in differ
solar versions and an Anti- Algae profile.
Through Tri-extrusion an additional layer of protection is extruded on the slats. This prevents, in combination with the UV-absorbers, that the polycarbonate components lose their mechanical properties, such as a high impact resistance. This is important for the hail and scratch protection.
Both Polycarbonate profiles, Mast(eR) & Clean(eR) are Tri- extruded.
The endcaps have an opening in the hook in order to promote water circulation and reduce algae formation.
Because of its compact size and the double hook connection the profiles can be rolled up to both sides and is applicable in every situation as well in newly built pools as in renovated ones.
It is possible to "recover" a few slats or the whole pool with the ReCover slats.

Mast(eR)

6001

6002

Mast(eR) Mono PVC

3 Year Warranty , 2.65 W/m2 K
Basic Slat with the size 60 x 14 mm, starter price, Isolation is the main goal.

Color	Code
White	6001
Gray	6002

Tri Extrusion Polycarbonate with double UV protection: Mast(eR) | Clean(eR)

- Uv protection in base material
- Caplayer with extra UV protection
- Double hook connection
- Hail resistance : tested Functionality HW5
- Warranty: 3 Jahre HW 3
- K-Value: 2.74 W/ m² K
- Installation by clicking
- Applicable in all situations: indoor and outdoor pools
- Min/ Max operating temperature in °C -30°C + 130°C
- Buoyancy in N per m² slats: Mast(eR) 7kg/m² | Clean(eR) 10 kg/m²

6101

6102

6103

6201

Mast(eR) Tri-Extrusion Polycarbonat

Profile size 60 x 14 mm, with double UV protection, Hail resistance Functionality HW5, 3 years warranty, K-Value 2.74W/m²K, per m².
High impact resistance, Extremely high resistance to cold and heat.
Three-chamber cavity profile and double hook connection.

Color	Code
Blue transparent with blue-transparent endcaps	6101
Total transparent with transparent endcaps	6102
Silver transparent with transparent endcaps	6103
Solar blue transparent with transparent endcaps	6201
Solar blue transparent with black endcaps	6202
Solar total transparent with transparent endcaps	6203
Solar total transparent with black endcaps	6204
Solar silver transparent with transparent endcaps	6205
Solar silver transparent with black endcaps	6206

6202

6203

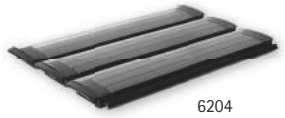
6204

6205

6206

Clean(eR) Tri-Extrusion Polycarbonat

As a result of a new dark room in the hook connection, almost none algae form anymore in the slats, as no light reaches the stagnant water anymore. Therefore, the pool stays clean much longer.
Because of its compact size and the double hook connection, Clean(eR) profile can be rolled up to both sides and is applicable in every situation, as well in newly built pools as in renovated ones. In addition, Clean(eR) Profile is easy to assemble and disassemble by means of a click- and slide-system.
Durable Plastic Polycarbonate with UV-Absorber im base material.

Color	Code
Solar blue transparent with black end caps	6301
Solar silver transparent with transparent end caps	6302

6301

6302

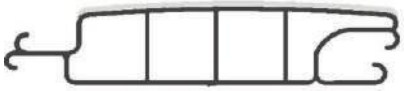

Accessories

Start kit discharge aid for correct positioning of slats in upper and lower installations + 4 fastening straps and universal brackets.

Article	Code
Start kit discharge aid + 4 fastening straps and universal brackets	6001-E2

ACCESS LADDERS V2A/AISI 304

ACCESS LADDER (V2A/AISI 304) ACCORDING TO DIN EN 16582-1

Highly polished stainless steel V2A/AISI 304, holm Ø 43 mm, with all accessories, holm distance: 500 mm, distance to the wall: 144 mm, step distance: 265 mm (Distance ground to first stage 250 mm), stainless steel non-slip steps.

HOLM TIGHT CURVED

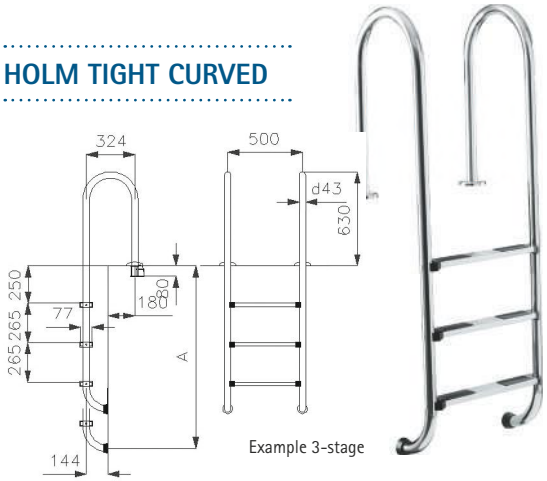

Version	number of steps	max. burden	Code	kg
Holm tight curved	2	120 kg	510-N	10,0
Holm tight curved	3	120 kg	511-N	11,8
Holm tight curved	4	120 kg	512-N	13,2
Holm tight curved	5	120 kg	513-N	14,0

HOLM WIDE CURVED

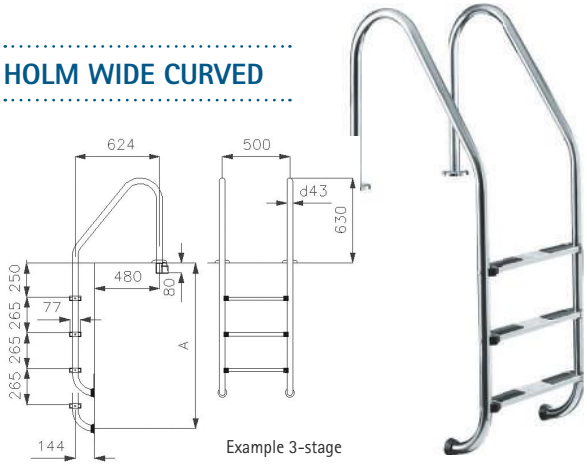

Version	number of steps	max. burden	Code	kg
Holm wide curved	2	120 kg	520-W	10,0
Holm wide curved	3	120 kg	521-W	11,8
Holm wide curved	4	120 kg	522-W	13,2
Holm wide curved	5	120 kg	523-W	10,4

EQUIPMENT (FOR HOLM TIGHT CURVED AND HOLM WIDE CURVED)

Article	Code	Gross Price €
Mounting set flange mounting AISI 304, 1 pair for ladders tight and curved	510	55,29 €

2-SECTION LADDER (V2A/AISI 304) ACCORDING TO DIN EN 16582-1

2-SECTION

High quality 2-section stainless steel ladder (V2A/AISI 304), highly polished stainless steel, holm Ø 43 mm, with all accessories, holm distance: 500 mm, distance to the wall: 144 mm, step distance: 265 mm (Distance ground to first stage 250 mm), both parts with flange mounting, stainless steel non-slip steps.

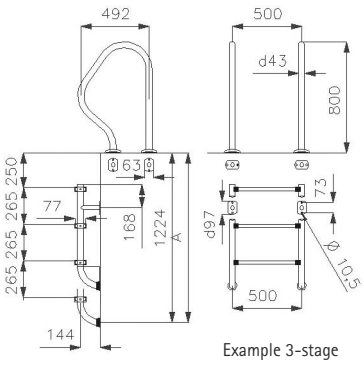

Article	number of steps	max. burden	Code	kg
Access Ladder	3	120 kg	531-U	22,5
Access Ladder	4	120 kg	532-U	23,5

HIGH POOL SAFETY LADDER ACCORDING TO DIN EU NORM

complete with folding part

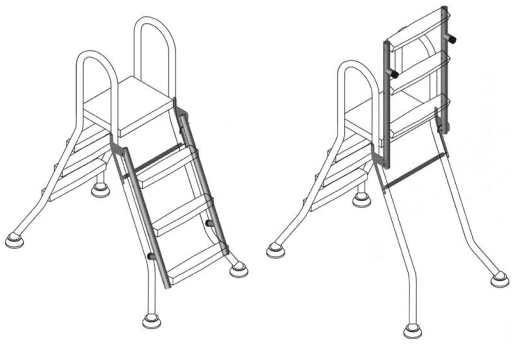

Pool height	number of steps	max. burden	Code	kg
1,00 m	3	120 kg	515-HD	20,5
1,20 m	4	120 kg	516-HD	23,5
1,50 m	5	120 kg	517-HD	26,8

HIGH POOL LADDER (V2A/AISI 304) ACCORDING TO DIN EN 16582-1*

Highly polished stainless steel V2A/AISI 304, holm Ø 43 mm, with anti-slip steps and platform made of plastic, 500 mm wide.

Steps: 4/4

Steps: 4/1

Pool height	number of steps	max. burden	Code	kg
1,00 m	3/3	120 kg	515-H	18,0
1,20 m	4/4	120 kg	516-H	20,5
1,50 m	5/5	120 kg	517-H	23,8
1,20 m	4/1	120 kg	518-H	16,0
1,50 m	5/1	120 kg	519-H	19,5

Conversion-Sets (single sided) adapt to DIN EN 16582-1	Code	kg
Conversion-Set Folding Lock for High Pool Ladders with 3 steps	5910	8,0
Conversion-Set Folding Lock for High Pool Ladders with 4 steps	5912	8,5
Conversion-Set Folding Lock for High Pool Ladders with 5 steps	5915	9,0

* To comply with DIN EN 16582-1: Coversion required

LADDER HANDLE ARCH (V2A/AISI 304)

Height 850 mm, 1200 mm outreach, holm Ø 43 mm, stainless steel V2A/AISI 304 polished

Article	Packing	Code	kg
Ladder handle arch	12	510.1	5,5

08

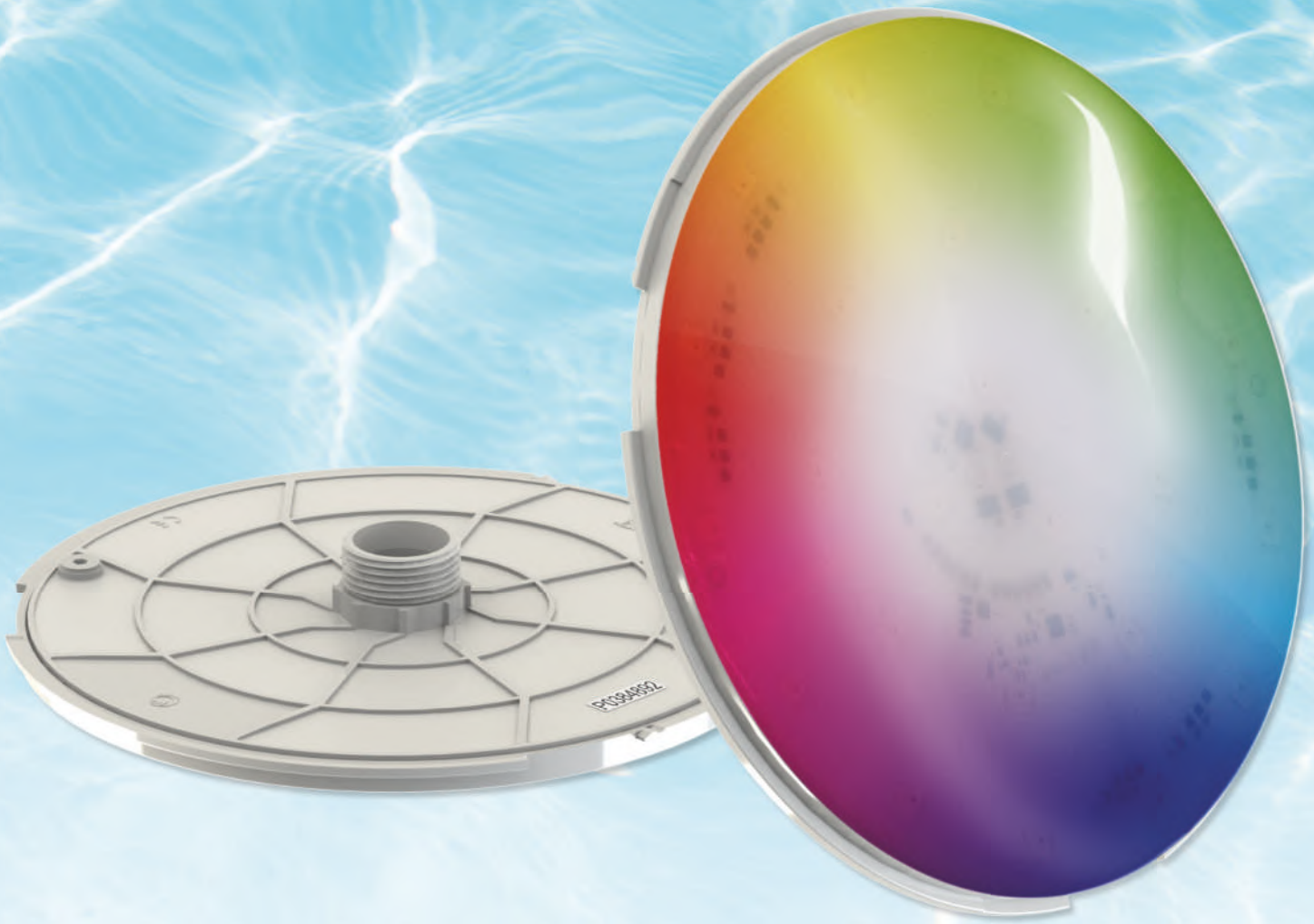

LIGHTING

*Spot on! With our bulbs you put your pool in the right light.
All the colors in the light spectrum make sure you do just that
Create a mood image that you want to have. With MIDAS you get
Modern LED lights as well as classic lamps.
Extensive accessories, such as various panels, wall ducts,
Controls and additional cables, junction boxes and transformers is
of course available.*

OVERVIEW

148	Adagio^{PRO} LED Lights
149	Spectra LED Lights
150	Underwater Lights, LED Replacement Bulbs
151	Adagio^{PRO} Wall Conduits
152	Adagio^{PRO} Face Plates
153	Controls for Adagio^{PRO} and LED Replacement Lamp LPS56 and PLW56-Series
154	LED Underwater Lights
157	Conduit Cable, Tool Set, Cable for Underwater Lights, Deck Box

NEW

Adagio PRO LED LIGHTS

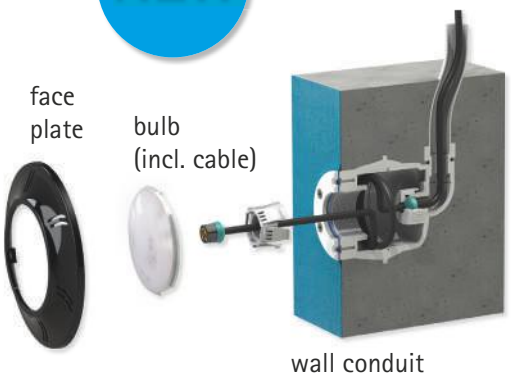

ADAGIO PRO underwater lights impress with their ultra-flat design and high luminosity. The click system makes the installation quick and easy. Face plates are available in different materials and shapes.
No niche is necessary. Remote control can synchronise the lights and gives different white tones and selectable 11 RGB modes.

- 3 available bulb diameters: 50 mm, 100 mm and 170 mm
- can be installed in most 1½" wall conduits
- the 170mm version is fully compatible with PAR56 niche
- resin filled NoAir™ housing: impossible for water to infiltrate in the light
- the use of high quality polymers makes the light salt electrolysis compatible
- detachable, 4 m rubber cable 2 x 1 mm² (50 mm and 100 mm), 4 m rubber cable 2 x 1,5 mm² (170 mm) included
- programmable - cold white
  - normal white
  - warm white
  - 11 RGB color modes with smooth transitions
- dimming possibility (100 %, 75 %, 50 %)
- very wide beam angle to avoid dark spots in the pool
- easy to install
- 116° beam angle
- protection class IP65 measured at a depth of 3 m
- water temperature from –5°C to +40 °C
- suitable for all types of pools
- DMX512 and RS-485 suitable in combination with #RCO-150 and #RC-150
- same color gradient after renewed reconnection or after power interruptions
- Controllable with RC control, on page 153
- Lens: matt

170 mm

ADAGIO PRO LED BULB – PAR 56 *

long lifetime LEDs: > 50.000 hours, also available separately

Diameter	Color	LED quantity	Lumen Lm	Performance	Packing	Code
170 mm	white 5.000 K	128	5.500	60 W/12 V	6	675-W
170 mm	warm white 3.300 K	128	4.950	60 W/12 V	6	675-WW
170 mm	RGB	3 x 32	3.000	75 W/12 V	6	675-RGB

100 mm

ADAGIO PRO LED BULB *

long lifetime LEDs: > 50.000 hours, > 50,000 hours, also available separately

Diameter	Color	LED quantity	Lumen Lm	Performance	Packing	Code
100 mm	white 5.000 K	64	2.600	30 W/12 V	6	676-W
100 mm	warm white 3.300 K	64	2.300	30 W/12 V	6	676-WW
100 mm	RGB	3 x 16	1.700	45 W/12 V	6	676-RGB
50 mm	white 5.000 K	16	600	6 W/12 V	6	677-W
50 mm	warm white 3.300 K	16	540	6 W/12 V	6	677-WW
50 mm	RGB	3 x 8	400	10 W/12 V	6	677-RGB

50 mm

* Matching aperture selection see catalog page 152

SPECTRA LED LIGHTS

NEW

PECTRA underwater lights convince with their ultra-flat design, high luminosity and very even pool illumination. Several lights can be operated in parallel with each other. Wall bushings allow quick and easy installation. Shutters in many materials and shapes refine these underwater lights. With just one click on your remote, you give your pool a completely different look - different white tones are as selectable as 11 different RGB colors.

- 3 diameters available: 50 mm, 100 mm and 170 mm
- Suitable for most 1½ "wall feedthroughs
- 170mm version: compatible with PAR56 recessed box
- Resin-filled NoAir ™ package: no water penetration
- suitable for use with high quality polymers for salt electrolysis
- detachable, 2 m cable 2 x 1 mm2 included
- Programmable (RGB): - cold white
  - neutral white
  - warm white
  - 11 RGB colors with smooth transitions
- Very wide beam angle 120 ° for optimal pool illumination
- easy to install
- Degree of protection IP68 (measured at 3 m depth), protection class III
- Water temperature from -5 ° C to +40 ° C
- suitable for all types of pools
- suitable for salt electrolysis (high quality polymer)
- Same color gradient after renewed reconnection or after power interruptions
- Controllable with RC control, on page 153
- Lens: clear

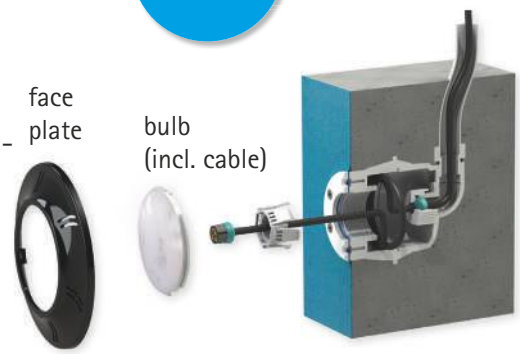

SPECTRA LED BULB – PAR 56*

long lifetime LEDs: > 30.000 hours, also available separately

Diameter	Color	LED quantity	Lumen Lm	Performance	Packing	Code
170 mm	cool white or warm white oder blau 3.000 K-6500 K	128	2.800	24,5 W/12 V	6	655-W
170 mm	RGB	3 x 32	1.600	24,5 W/12 V	6	655-RGB

170 mm

SPECTRA LED BULB*

long lifetime LEDs: > 30.000 hours, also available separately

Diameter	Color	LED quantity	Lumen Lm	Performance	Packing	Code
100 mm	cool white or warm white oder blue 3.000 K -6.500 K	64	1.300	13,5 W/12 V	6	656-W
100 mm	RGB	3 x 16	850	13,5 W/12 V	6	656-RGB
50 mm	cool white or warm white oder blue 3.000 K -6.500 K	16	350	4,5 W/12 V	6	657-W
50 mm	RGB	3 x 8	250	4,5 W/12 V	6	657-RGB

100 mm

50 mm

* Matching aperture selection see catalog page 152

UNDERWATER LIGHT HALOGEN WITHOUT NICHE

Small compact underwater light made of white ABS, NO niche required! Installation in **concrete pools** with O-ring in wall roof conduit, in **prefabricated pools** with gaskets and counter nut 2" AG. Halogen bulb 50 W/12 V, incl. 2,5 m cable 2 x 1,5 mm².

For pool type	Packing	Code	kg
Concrete pool, adhesive with O-ring	12	17883	0,50
Prefabricated pool, 2" AG	12	17883V	0,60

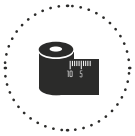

Art. / Code	A (mm)	B (mm)	C (mm)	D (mm)
# 17883	59,00	74,97	91,55	94,27
# 17883V	2" AG	74,97	91,55	94,27

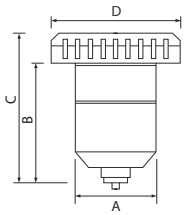

LED REPLACEMENT BULB PAR 56 WHITE

Break-proof polycarbonate, Execution flat, white LED replacement lamp, intense light intensity, suitable for all UWS PAR 56, Lifetime> 25,000 hours, Incl. 4 m connection cable 2 x 1 mm², cast waterproof, 120° beam angle, Degree of protection IP68 measured at 1 m depth, Max. Water temperature 35 °C, color temperature 9,000 K, also available individually, not suitable for # 481-TM, # 483-TM and # 493-TM

Color	LED quantity	Lumen	Performance	Packing	Code	kg
White	324	1.850 Lm	19W/12V	6	PLW56-400	0,22
White	531	2.100 Lm	28W/12V	6	PLW56-700	0,27

2 years manufacturer's warranty

LED REPLACEMENT BULB PAR 56 RGB

Break-proof polycarbonate, flat design, suitable for all UWS PAR 56, RGB LED lamps for a special ambience, Basic colors: red, green, blue, 16 color settings controllable by remote control, with installation instructions for synchronization, service life> 25,000 hours, incl. 4 m connection cable 2 x 1 mm², waterproof shed, 120° beam angle, degree of protection IP68 measured at 1 m depth, Max. Water temperature 35 °C, also available individually, suitable for UWS PAR56 headlights, not suitable for # 481-TM, # 483-TM and # 493-TM
Optional controls on page 153

Color	LED quantity	Lumen	Performance	Packing	Code	kg
RGB	324	925 Lm	21W/12V	6	PLS56-400	0,22
RGB	531	1.450 Lm	25W/12V	6	PLS56-700	0,27

2 years manufacturer's warranty

ADAGIO[PRO] WALL CONDUITS

Code 670, 671: Material: ABS plastic
Wall conduit for concrete pool, stone wall pools, liner and mosaic pools to flex tube 25 mm high quality flex tube ¾" external thread 0,8 m, internal cable gland, incl. flange, gaskets and screws

Code 672, 673: Material: ABS plastic
Wall conduit for concrete pool, stone wall pools, liner and mosaic pools to glue Ø 50 – 63 mm PVC pipe, incl. flange, gaskets and screws

Code 674: Material: ABS plastic
Wall conduit to prefabricated pools, wooden or set-up bassin with 0,8 m high quality flex tube 25 mm / ¾" external thread, incl. flange, gaskets and screws

Code 675: Material: stainless steel V4A/AISI 316
Wall conduit to prefabricated pools, wooden or set-up bassin with 0,8 m high quality flex tube 25 mm / ¾" external thread, incl. flange, and gaskets

670, # 672 and # 675: ideal for Formwork stones!

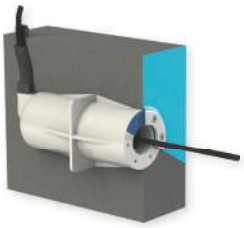
670, 671

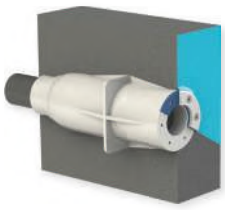
672, 673

674

675

Length	Material	Packing	Code	kg
Length 129,5 mm	ABS plastic	6	670	0.70
Length 254 mm	ABS plastic	6	671	0.59
Length 152 mm	ABS plastic	6	672	0.60
Length 276 mm	ABS plastic	6	673	0.35
Length 160 mm	ABS plastic	6	674	0,7
Length 130 mm	stainless steel V4A/AISI 316	6	675	0,5

DIRECT WALL MOUNT SET

NEW

Ideal for all **ADAGIO[PRO]** and **SPECTRA** lights in 100 mm diameter universal for concrete and foil basins

Diameter	Material	Packing	Code
100 mm	ABS Plastic	1	HT1007

* Ideal for styrofoam stones

Purchase only in full packaging units.

ADAGIO^{PRO} FACE PLATES

Illustration shows modell RA, Polymer, color: white

Model RA, material: polymer

Diameter	Color	Packing	Code	kg
250 mm	white	6	678	0,92
250 mm	anthracite	6	682	0,92
250 mm	sand	6	683	0,92
176 mm	white	6	679	0,56
176 mm	anthracite	6	684	0,56
176 mm	sand	6	685	0,56

Color: anthracite, sand

Model RA, material: stainless steel AISI 316L

Diameter	Color	Packing	Code	kg
250 mm	polished silver	6	680	2,48
176 mm	polished silver	6	681	1,05

Illustration shows modell RD, Polymer, color: white

Model RD, material: polymer

Diameter	Color	Packing	Code	kg
250 mm	white	6	664	0,92
250 mm	anthracite	6	665	0,92
250 mm	sand	6	666	0,92
176 mm	white	6	667	0,56
176 mm	anthracite	6	668	0,56
176 mm	sand	6	669	0,56

NEW

Illustration shows modell Flat, Stainless steel, polished silver

Model FLAT, material: polymer, also available individually

Diameter	Material/Color	Packing	Code	kg
256,5 mm	white	6	695	1,5
168,5 mm	white	6	696	1,5
128 mm	white	6	686	0,40

Model FLAT, material: stainless steel AISI 316L

Diameter	Color	Packing	Code	kg
280 mm	polished silver	6	687	2,48
185 mm	polished silver	6	688	1,05
128 mm	polished silver	6	689	0,70

NEW

Spare parts ADAGIO^{PRO}

ADAGIO^{PRO} connection kit

Consisting of: 1½" sleeve, pinch seal and contact plug

Article	Packing	Code
ADAGIO^{PRO} connection kit 50-100 mm	1	675-E1
ADAGIO^{PRO} connection kit170 mm		675-E2

ADAGIO^{PRO} Flat gasket silicone

90 x 47 x 2 mm, blue, for flange / wall duct

Article	Packing	Code
ADAGIO^{PRO} Flat gasket silicone	1	670-E1

CONTROLS FOR ADAGIO PRO AND LED REPLACEMENT LAMP PLS56 AND PLW56-SERIES

Base station with signal receiver, 230V AC input, 2 outputs for pool cover, garden lighting, etc., incl. remote control black/blue for switching the lamps on and off and changing the color mode. protection: IP54, protection class II, permissible ambient air temperature: 0 to 40°C

RC-100

RC0-100

for	Packing	Dimensions	Trafo	Code
AdagioPro / PLS56-/PLW56-Series	1	150 x 157 x 51 mm	–	RC0-100
AdagioPro / PLS56-/PLW56-Series	1	195 x 194 x 90 mm	200 VA*	RC-100

* incl. 12 V output for LED headlights

As above, but as intelligent control for ADAGIO^{PRO} RGB with dimming function
(100 % - 75 % - 50 %) as well as other connections possible via DMX 512,
RS485, CAN BUS and SD card slot, incl. DIP-switch to select the Control function and remote control black/red

RC-150

RC0-150

for	Packing	Dimensions	Trafo	Code
AdagioPro / PLS56-/PLW56-Series	1	150 x 157 x 51 mm	–	RC0-150
AdagioPro / PLS56-/PLW56-Series	1	298 x 420 x 145 mm	300 VA*	RC-150

* incl. 12 V output for LED headlights

TRANSFORMERS

Compound-insulated transformers for pool lighting. Protection class II - IP 65.
Pursuant to EN 61558-2-6. Thermal protection: thermal fuse return 130 °C.

Performance	Packing	for 12 V bulbs	Code	kg
50 VA	1	1 x 50 W	458	1,0
100 VA	1	1 x 100 W	459	1,8
100 VA	1	2 x 50 W	455	2,7
150 VA	1	1 x 150 W	461	2,8
150 VA	1	2 x 75 W	465	2,8
300 VA	1	1 x 300 W	456	4,3
350 VA	1	2 x 175 W	462	4,4
600 VA	1	2 x 300 W	457	8,7
900 VA	1	3 x 300 W	463	13,0
1.050 VA	1	3 x 350 W	464	14,0

Transformer 600 VA

RADIO REMOTE CONTROL

Article	Packing	Code
Wireless remote control with exchangeable keyboard (black/red and black/blue)	1	RCTX

UNDERWATERWATER LIGHT COMPLETELY MADE OF STAINLESS STEEL (V4A / AISI 316)

The LED with aperture is only 16 mm away from the inside of the tank and is therefore very flat and shapely. Including cover ring and built-in pot, with seals and screws for liner/ prefabricated basins. Including fixation for LED. Supplied without connection cable and lamp. Please order cable protection tube ¾" separately (# 441-3TM, see page 157). Matching LED: #PLW56 and PLS56 on page 150.

Article	Packing	Code
Liner pools	1	491-MP
Bolt set ready-made basin for # 491-MP	1	491-E1

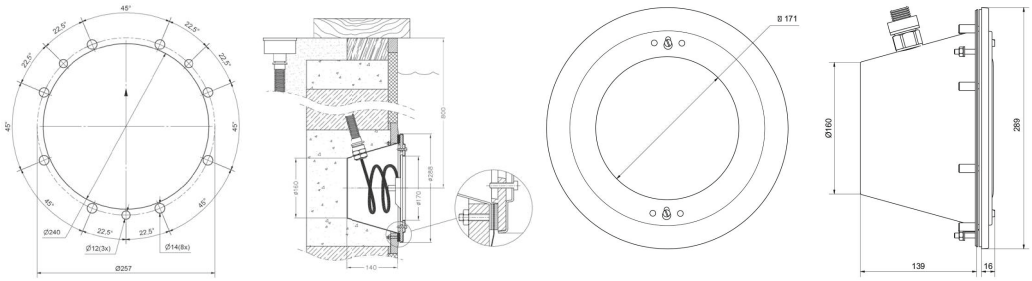

UNDERWATER LIGHT COMPLETE STAINLESS STEEL (V4A/AISI 316)

All stainless steel V4A/AISI 316, complete with cover and built-in niche. Light 300W, PAR56 GE with 2.5 m cable 2x4mm². Conduit cable please order separately (# 441-3TM), also separately available. Only for concrete pools. Dimensions see below.

For pool type	Packing	Code	kg
Concrete pool	4	481-TM	2,7

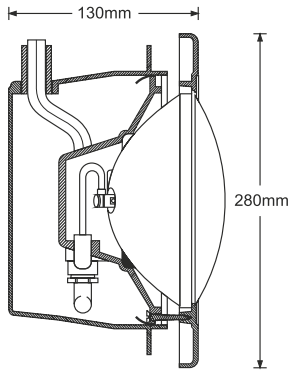

Dimensions for products with item no.:

#441-TM
#442-TM
#483-TM
#493-TM
#481-TM

UNDERWATER LIGHT ABS, FACE RIM STAINLESS STEEL (V4A/AISI 316)

Classical design, complete with cover made of stainless steel (V4A/AISI 316) and niche ABS. Niche with either side or bottom output. Light 300W, PAR56 GE, with 2.5 m cable 2x4mm², also separately available. Conduit cable please order separately (# 441-3TM, see page 157). Dimensions see below

For pool type	Packing	Code	kg
Concrete pool	4	483-TM	2,5
Liner-/Prefabricated pools with flange	4	493-TM	3,0

UNDERWATER LIGHT ABS

Classical version, complete with cover and niche made of ABS, niche optional with side or bottom output. Light 300W, PAR56 GE with 2.5 m cable 2x4mm², also separately available. Please order cable protection tube ¾" separately (# 441-3TM, see page 157). Dimensions see above.

For pool type	Packing	Code	kg
Concrete pool	4	441-TM	3,18
Liner-/Prefabricated pools with flange	4	442-TM	3,13
Liner-/Prefabricated pools with flange, without bulb	4	442-TO	2,30

Spare part	Packing	Code
Face Rim for #441 and 442	1	442-E2
Niche w/o flange edge, incl. flange set for #442-TM / #442-TO	1	442-E5

MINI UNDERWATER LIGHT FOR SPA & POOL

Housing Ø10 cm in color white or chrome, cover ring incl. 2" external thread, incl. 3 m neopren cable HO/RNF 2x1 mm. Available in 2 types: Halogen bulb 35 W/12 V or 5 LED x 5 W/12 V.

HALOGEN - ONLY FOR UNDERWATER

Bulbs	Packing	Code	kg
White	12	447	0,7
White with cover ring (Chrome)	12	447-1	0,7

LED - FOR OVER & UNDERWATER

Bulbs	Packing	Code	kg
White	12	447-LW	0,8
Red	12	447-LR	0,8
Yellow	12	447-LY	0,8
Green	12	447-LG	0,8
Blue	12	447-LB	0,8

LED - FOR OVER & UNDERWATER

5 LED a´ 5 W and 360 Lumens

Bulbs – with cover ring (Chrome)	Packing	Code	kg
White	12	446-LW	0,8
Red	12	446-LR	0,8
Yellow	12	446-LY	0,8
Green	12	446-LG	0,8
Blue	12	446-LB	0,8

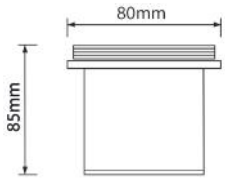

LED UNDERWATER LIGHT MIDA.SPA

STAINLESS STEEL (V4A/AISI 316)

Incl. 2" threaded connection and mounting for illumination outside of the pool.
Cable 1,5 m, 12–24 VAC.

Color	Watt	Lumen	Packing	Code	kg
White	3	400 Lm	1	448-LW	0,846
Red	3	195 Lm	1	448-LR	0,846
Green	3	360 Lm	1	448-LG	0,846
Blue	3	105 Lm	1	448-LB	0,846
RGB	6	440 Lm	1	448-RGB	0,842

Description	Code	kg
RGB power supply with remote control up to 30 RGB spot lights	448-RC	0,276

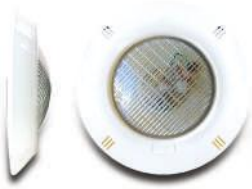

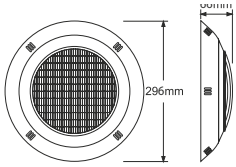

UNDERWATER LIGHT EXTRA FLAT

ABS, **for concrete and liner pools,** no niche required! ABS, cover glass made of unbreakable polycarbonate. Halogen lights are equiped with 4 colored lenses in colors red, green, blue or yellow. LED lights have an integrated RGB-color changing program. Protection class IP 65, incl. 3,4 m cable 2 x 1,5 mm². Wall connection kit for easy installation, without remote control. Diameter: 296 mm, Depth: 66 mm.

For pool type	Packing	Bulbs	Code	kg
Concrete pool	4	Halogen 100 W/12V	HT1000	1,2
Concrete pool RGB	4	100 LED's 50 W/12V	HT1001	1,3
Liner pool	4	Halogen 100 W/12V	HF1000	2,0
Liner pool RGB	4	100 LED's 50 W/12V	HF1001	1,4

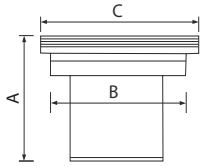

UNDERWATER LIGHT HALOGEN WITH NICHE

Small compact underwater light, **for concrete and liner pools,** complete ABS with niche. For **liner-/prefabricated** pools, with flange, sealing and stainless steel screws. Halogen bulb 50 W/12 V, incl. 2,5 m cable 2 x 1,5 mm².

For pool type	Packing	Code	kg
Concrete pool	4	17885	1,3
Liner-/Prefabricated pool	4	17886	1,3

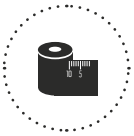

Art. / Code	A (mm)	B (mm)	C (mm)
# 17885	123,00	163,20	147,00
# 17886	127,30	147,00	163,20

CABLE CONDUIT

Suitable for all PAR 56 underwater lights, connection ¾" AG, Length 1 m, color: white

Article	Packing	Code	kg
Cable conduit, 1 m, color: white	50	441-3TM	0,22

TOOL SET FOR ADAGIO[PRO]

Easy fixing of light module in face plate, easy fixing of cable gland, easy guiding of cables with cable puller, free when buying 2 or more lamps

Article	Packing	Code	kg
Tool set for ADAGIO Pro	1	691	0,3

CABLE H07RN-F FOR UNDERWATER LIGHTS

Rubber connection cable, flexible, 450/750 V, temperature range: -7 - +60 ° C, oil-resistant, flame-retardant, UV-resistant, 1000 VAC protected, can be used for short-circuit and earth-proof installations in accordance with IEC 60364-5-52 / HD 60364- 5-52 / VDE 0100 Part 520. In accordance with EN 50565-2, compliant with EU Directive 2014/35 / EC (Low Voltage Directive), with <HAR> harmonization label, 50 m castors, color: black

Article	Outside Ø	Packing	Code
Cable 2 x 2,5 mm²	10,2 - 11,7 mm	1	639
Cable 2 x 4,0 mm²	11,8 - 13,4 mm	1	638
Cable 3 x 6,0 mm²	14,1 - 15,9 mm	1	637

Deck box (ABS)

Deck box (stainless steel round)

Deck box (stainless steel quadrate)

DECK BOX

Available in 3 types:

- ABS, cable conduit 2 x ¾"
- stainless steel V2A/AISI 304, round, d: 12 cm, cable conduit 2 x ¾"
- stainless steel V2A/AISI 304, quadrate, dimensioning: 12,4 x 12,4 cm, cable conduit 2 x ¾"

DIMENSIONING DECK BOX (ABS)

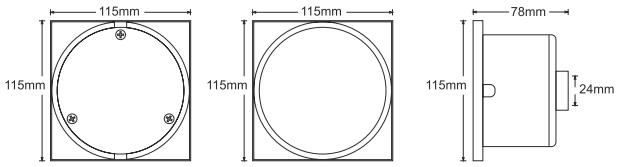

Type	Packing	Code	kg
ABS	12	417-TN	0,3
Stainless steel (round)	32	07.05	0,5
Stainless steel (quadrate)	32	07.06	0,6

09

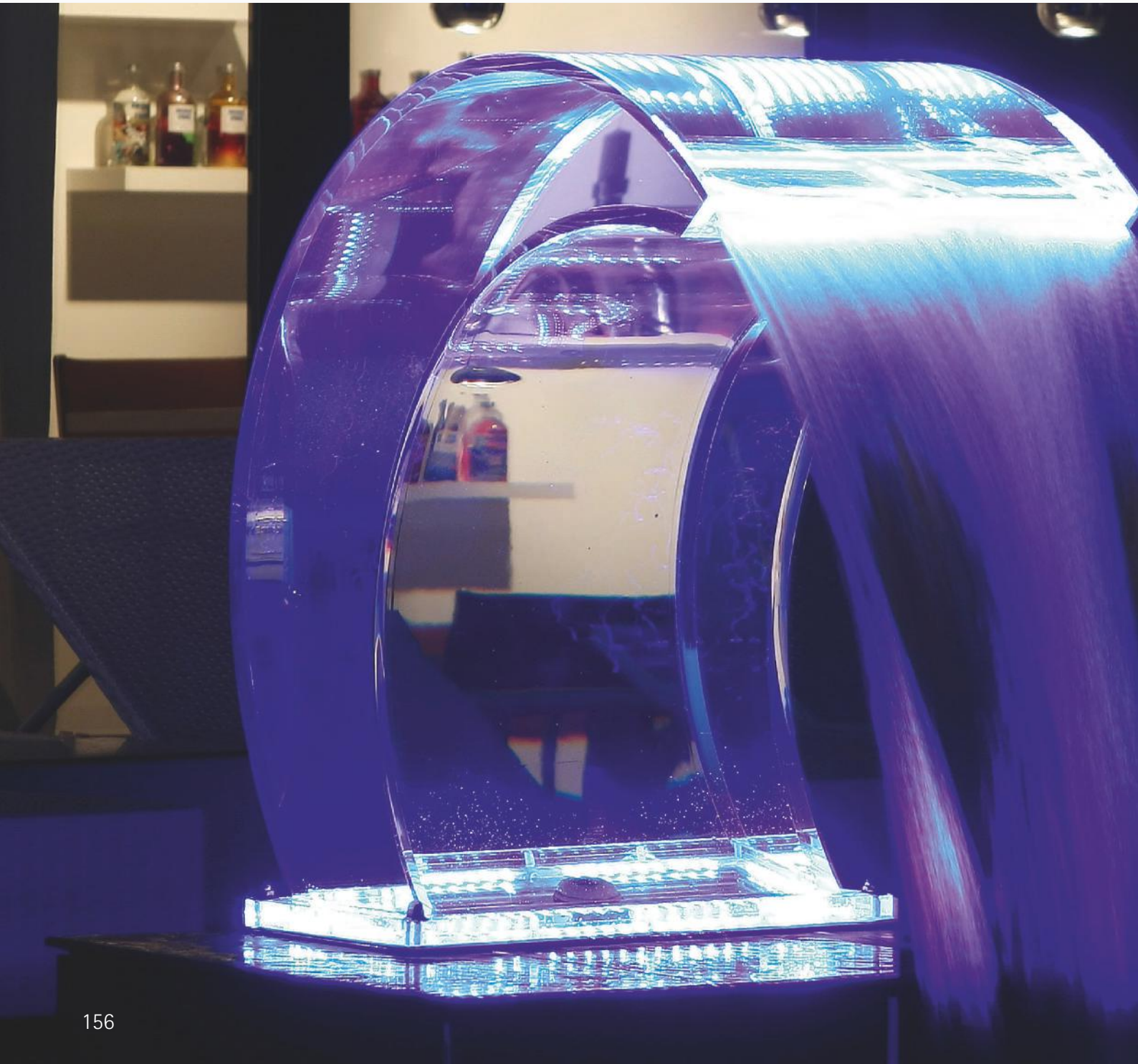

WATER ATTRACTIONS

Water attractions enhance each pool and create a whole special atmosphere. Elegant design made of high-quality stainless steel - skilfully processed with invisible welds: this quality leaves nothing to be desired. Gentle showers massage the back and provide relaxation.
The soft sound of the water creates a special mood and calms the senses.

OVERVIEW

158	Water Attraction Costa Stainless Steel
158	Water Attraction Cascade & Cascade Rain
159	Water Attraction Grote & Texas
160	Water Attraction Tropic
161	Water Attraction Rio
162	Water Attraction Flexi Stainless Steel Accessories Water Attractions
185	Water Attraction Geyser Stainless Steel
163	Air Blower

WATER ATTRACTION COSTA

- connection with 2" internal thread
- material stainless steel V4A/AISI 316
- **incl. anchor**
- pumps see from page 83

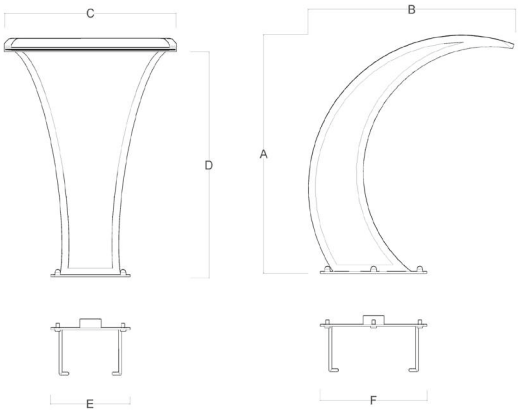

Model	Packing	Recommended pump capacity	kg	Code
Costa 300	1	18 m³/h	18	01.20
Costa 500	1	21 m³/h	25	01.21
Costa 700	1	24 m³/h	50	01.22
Costa 1000	1	29 m³/h	60	01.23

Dimensions	A (mm)	B (mm)	C (mm)	D (mm)	E (mm)	F (mm)
Costa 300	650	600	300	560	180	260
Costa 500	700	600	500	660	230	310
Costa 700	800	765	700	730	255	340
Costa 1000	1000	900	1000	950	330	440

WATER ATTRACTION CASCADE and CASCADE RAIN

- connection with 2" internal thread
- material stainless steel V4A/AISI 316
- **incl. anchor**
- pumps see from page 83

Cascade

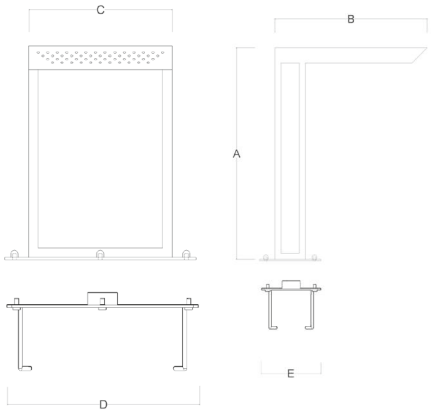

Cascade Rain

Cascade + Cascade Rain

Cascade Rain

Model	Packing	Recommended pump capacity	kg	Code
Cascade 300	1	5–18 m³/h	20	01.50
Cascade 500	1	6–21 m³/h	25	01.51
Cascade 700	1	7–24 m³/h	53	01.52
Cascade 1000	1	9–29 m³/h	64	01.53
Cascade Rain 300	1	5–18 m³/h	20	01.55
Cascade Rain 500	1	6–21 m³/h	25	01.56
Cascade Rain 700	1	7–24 m³/h	53	01.57
Cascade Rain 1000	1	9–29 m³/h	64	01.58

Dimensions	A (mm)	B (mm)	C (mm)	D (mm)	E (mm)
Cascade/Rain 300	700	500	300	400	200
Cascade/Rain 500	700	500	500	600	200
Cascade/Rain 700	700	500	700	800	200
Cascade/Rain 1000	700	500	1000	1100	200

WATER ATTRACTION GROTE

For wall-mounting, material stainless steel V2A/AISI 304

- pumps see from page 83

Model	Connection	A (mm)	Packing	kg	Code
G 300	2½" MIP	300	1	7,0	01.17
G 500	2½" MIP	500	1	11,5	01.18
G 700	2½" MIP	700	1	15,8	01.45
G 1000	2½" MIP	1000	1	21,4	01.19

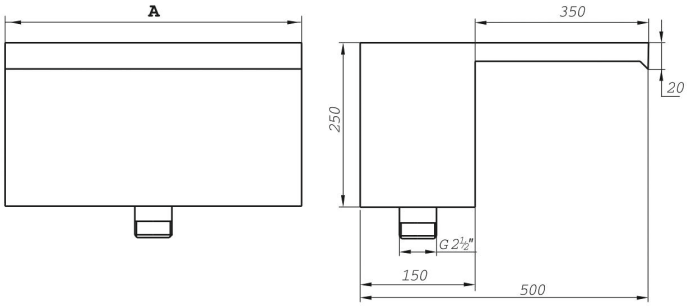

WATER ATTRACTION TEXAS

NEW

- **for wall mounting**
- connection with 1" internal thread
- material stainless steel V4A/AISI 316 polished
- Height ca. 140 mm
- run-out ca. 490 mm
- pumps see from page 83

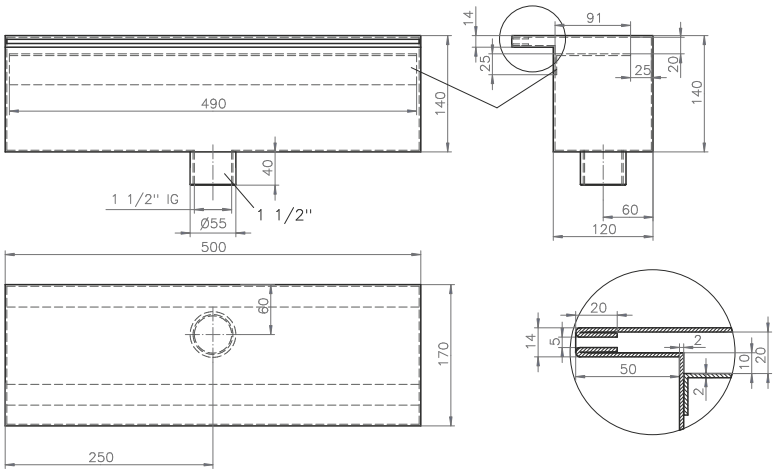

Model	Packing	Recommended pump capacity	Code
Texas	1	2–3 m³/h	01.65

WATER ATTRACTION TROPIC

Transparent, light yet elegant, the TROPIC showers are a design highlight. Made of clear acrylic glass, this attraction not only offers a clear view of the streaming waterfall, but is also a visual highlight in every wellness garden. The clear structures and the stable noble acrylic glass forming form a perfect unit. Thanks to the built-in LED/RGB lights, you will experience a fireworks display of color at twilight, which you can control individually with the remote control.

- case: acrylic glass 15 mm thick
- height: approx. 703 mm
- spout width: approx. 400 mm
- water connection: 1½" internal thread
- lighting: LED/RGB lighting with remote control
- mounting: flange mounting, flange plate 460 x 275 mm
- counterflange: 2"
- including remote control, controller (no protection) and transformer
- pumps see from page 83

Made in Germany

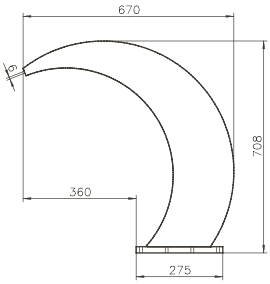

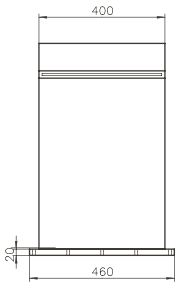

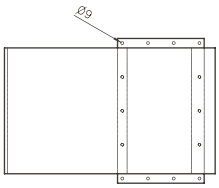

Model	Packing	recommended pump capacity	kg	Code
Tropic	1	23 m³/h		01.70

WATER ATTRACTION RIO

Exceptional and noble – the water attraction RIO meets the special taste. Made of durable stainless steel and acrylic glass, air bubbles, illuminated by long-lived LED/RGB lights, dance within the small aquarium.
An even waterfall pours into the pool or swimming pond.
Especially at dusk or at night you will experience a colorful spectacle of special kind. Waterfall, bubbles and LED/RGB lighting are separated adjustable.

- case: acrylic glass 11 mm thick
- height: approx. 715 mm
- spout width: approx. 400 mm
- water connection: 1½" IG
- lighting: LED/RGB lighting with remote control
- mounting: flange mounting, flange plate 460 x 275 mm
- counterflange: 2"
- including remote control, controller (no protection) and transformer
- pumps see from page 83

Made in Germany

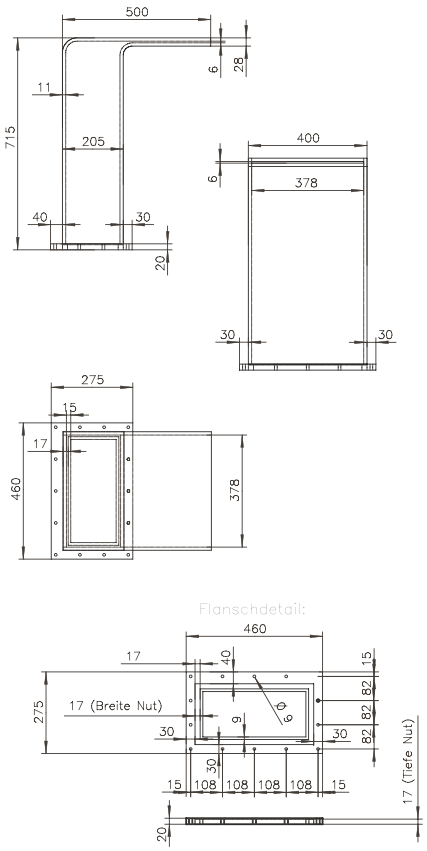

Model	Packing	recommended pump capacity	kg	Code
Rio	1	23 m³/h		01.80

WATER ATTRACTION FLEXI

- with 4 different nozzles
- splash water pipe Ø 51 x 1,5 x 1100 mm
- material stainless steel V2A/AISI 304
- incl. base
- recommended pump capacity: 8 – 10 m^3/h
- pumps see from page 83

TYPE A – ROUND JET

TYPE B – ROUND 6-RADIAL

TYPE C – FLAT JET

TYPE D – FLAT 4-RADIAL

Model	Connection	Packing	kg	Code
Type A	2" FIP	1	5,5	11.00
Type B	2" FIP	1	5,5	11.06
Type C	2" FIP	1	5,5	11.11
Type D	2" FIP	1	5,5	11.14

ACCESSORIES WATER ATTRACTIONS

NEW

Aspirations are available on request depending on the model

PIEZO SWITCH INSERT for foil and tile pools, incl. 5 m cable

Article	Code
Piezo switch insert for foil and tile pools	986-7

Article	Suitable for	material	Code
Piezo switch insert made of V4A stainless steel with built-in pot made of gunmetal / bronze	liner pools	gunmetal	986-8
	liner pools	gunmetal	986-8B
	prefabricated pools	Rotguss	986-9
	prefabricated pools	bronze	986-9B

AIR BLOWER

Pumps designed for bubble baths and swimming pools, water treatment, car drying, ventilation / dust extraction, etc. Blower pumps constructed entirely in aluminum and suitable for continuous operation. Single stage side channel pumps, without any maintenance. Includes intlet and outlet silencers.

Code	Max. Flow m^3/h	kW	HP	V	dB	Connec-tions	kg	Applications
790M	145	0,85	1,2	230	63	1 1/2"	16,0	10 Jets
790T	145	0,85	1,2	400	63	1 1/2"	16,0	10 Jets
791M	145	1,3	1,8	230	63	1 1/2"	17,0	10 Jets
791T	145	1,3	1,8	400	63	1 1/2"	17,0	10 Jets
792M	210	1,3	1,8	230	64	2"	22,0	20 Jets
792T	210	1,3	1,8	400	64	2'	22,0	20 Jets
793M	210	1,5	2,0	230	64	2'	24,0	20 Jets
793T	210	1,6	2,2	400	64	2'	23,0	20 Jets
794T	318	2,2	3,0	400	69	2'	30,0	20 Jets
795T	318	3,0	4,0	400	69	2'	36,0	20 Jets

10

SPARE PARTS

We have an extensive range of spare parts, if something is broken.
Do you need more spare parts or support? We will find a good solution.
Contact us!

OVERVIEW

166	Valves
170	Heat Pumps
194	Filters
198	Jet Swim Units
200	Vacuum Heads
201	Rotary Disc Valve

VALVES

MIDAS VALVE 1½"

Art. 310 SIDE MOUNT

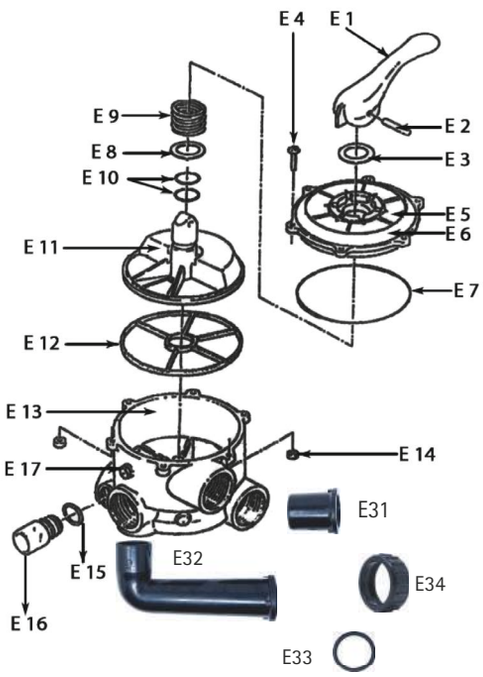

Description	Code	Gross Price €
handle	310-E1	on demand
pin (handle)	310-E2	on demand
ring	310-E3	on demand
screw M 6 x 30	310-E4	on demand
label	310-E5	on demand
cover	310-E6	on demand
cover o-ring	310-E7	on demand
washer	310-E8	on demand
spring	310-E9	on demand
axle o-ring (2x)	310-E10	on demand
disc	310-E11	on demand
spider gasket	310-E12	on demand
body (slip or treaded)	310-E13	on demand
nut M6	310-E14	on demand
sight glass gasket	310-E15	on demand
sight glass	310-E16	on demand
gauge nut with o-ring	310-E17	on demand
top assembly, mounted (E1-E11, less E4+E7)	310-E50	on demand
connector short	310-E31	on demand
connector 90 °	310-E32	on demand
gasket (2 pcs.)	310-E33	on demand
nut (2 pcs.)	310-E34	on demand
Complete piping kit (310-E31-310-E34)	310-E30	on demand

MIDAS VALVE 1½"

Art. 312 TOP MOUNT, Art. 313 TOP MOUNT

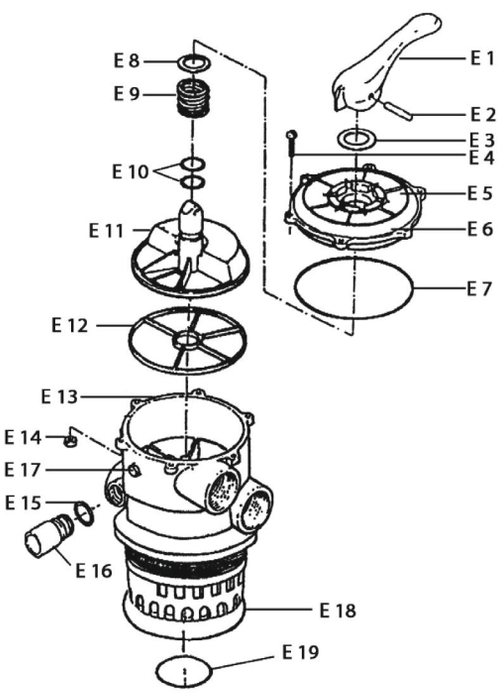

Description	Code	Gross Price €
handle	310-E1	on demand
pin (handle)	310-E2	on demand
ring	310-E3	on demand
screw M 6 x 30	310-E4	on demand
label	310-E5	on demand
cover	310-E6	on demand
cover o-ring	310-E7	on demand
washer	310-E8	on demand
spring	310-E9	on demand
axle-o-ring (2 x)	310-E10	on demand
disc	310-E11	on demand
spider gasket	310-E12	on demand
Body f. Top-Mount 1½" valve threaded, with 6" unified or buttress threads, 48,4 mm pipe conn.	312-E13	on demand
Body f. Top-Mount valve 1½" valve threaded, with 6" unified or buttress threads, 50 mm pipe conn.	312-E13/50	on demand
nut M6	310-E14	on demand
sight glass gasket	310-E15	on demand
sight glass	310-E16	on demand
gauge nut with o-ring	310-E17	on demand
filter o-ring (#312 + 313-S) (14S x 6 mm)	312-E18	on demand
o-ring for center pipe 50 mm/48,4 mm	312-E19	on demand
clamp set small "S" (#313-S), not shown	312-E20	on demand
Top assembly mounted (E1-E11, less E4+E7)	310-E50	on demand

Technical specifications are subject to change without prior notice.

MIDA VALVE 1½"

Art. 315 SIDE MOUNT, Art. 317 TOP MOUNT

Description	Code	Gross Price €
handle	315-E1	on demand
pin (handle)	315-E2	on demand
teflon-ring (handle)	315-E3	on demand
pin (cover)	315-E4	on demand
label	315-E5	on demand
cover	315-E6	on demand
cover o-ring	315-E7	on demand
ring	315-E8A	on demand
ring	315-E8B	on demand
spring	315-E9	on demand
axle o-ring	315-E10	on demand
washer	315-E11	on demand
roter (disc) with spider gasket	315-E12	on demand
gauge nut	315-E14	on demand
gauge nut gasket	315-E14D	on demand
sight glass gasket	315-E15	on demand
sight glass	315-E16	on demand
valve body SIDE MOUNT	315-E13	on demand
valve body TOP MOUNT #317-S	317-S-E13	on demand
top assembly, mounted	315-E50	on demand
filter o-ring #317-S (145 x 6 mm)	317-E18	on demand
o-ring pipe connection	317-E19	on demand
clamp set small "S" not shown	317-E20	on demand

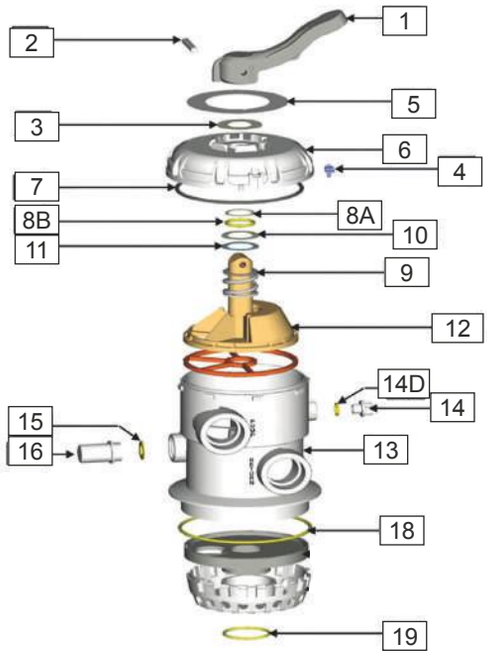

AUTOMATIC BACKWASH VALVES

Art. 310 SIDE MOUNT, Art. 320 SIDE MOUNT

Description	Code	Gross Price €
actuator 2" MIDAS	320-A1	on demand
actuator 1½" MIDAS	310-A1	on demand
Cover 1½–2"	310-A2	on demand
motor 1½–2"	310-A3	on demand
main board 1½–2"	310-A4	on demand
automatic kit	310-A5	on demand
pressure-switch 1½–2"	310-A8	on demand

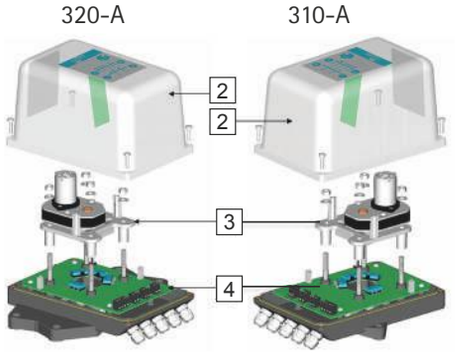

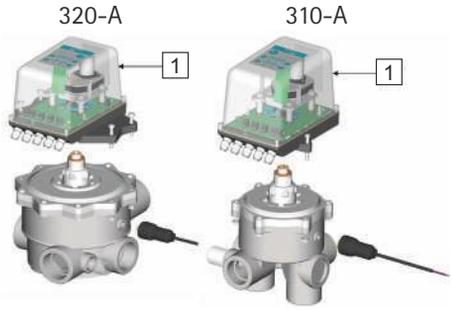

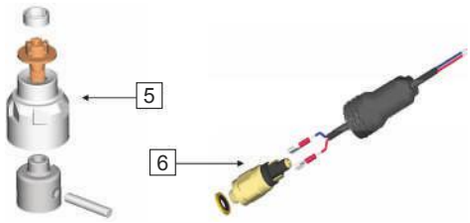

Technical specifications are subject to change without prior notice.

MIDAS VALVE 2"

Art. 320 SIDE MOUNT

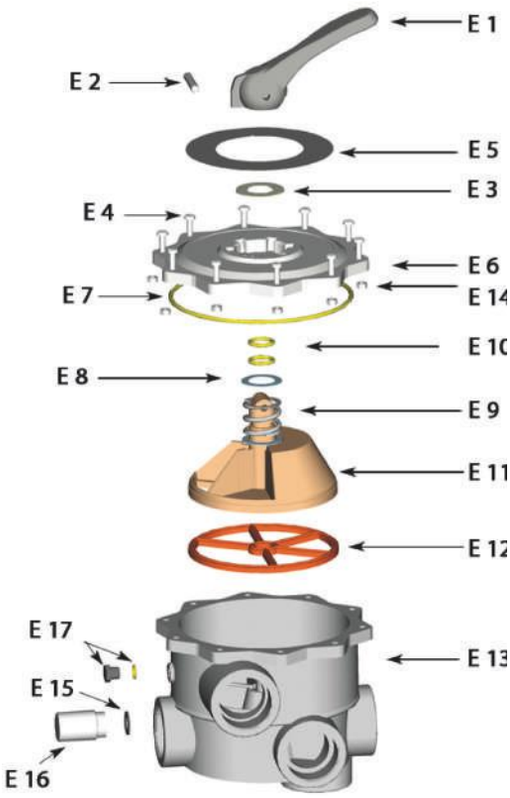

Description	Code	Gross Price €
handle	310-E1	on demand
pin (handle)	310-E2	on demand
ring	310-E3	on demand
screw (M6 x 30)	310-E4	on demand
label	320-E5	on demand
cover	320-E6	on demand
cover o-ring	320-E7	on demand
washer	310-E8	on demand
spring	310-E9	on demand
axle o-ring (2 x)	310-E10	on demand
disc	320-E11	on demand
spider gasket	320-E12	on demand
body (slip or treaded)	320-E13	on demand
nut M6	310-E14	on demand
sight glass gasket	310-E15	on demand
sight glass	310-E16	on demand
gauge nut with o-ring	310-E17	on demand
top assembly, mounted (E1-E11, less E4+E7)	320-E50	on demand

MIDAS VALVE 3"

Art. 331-OT SIDE MOUNT

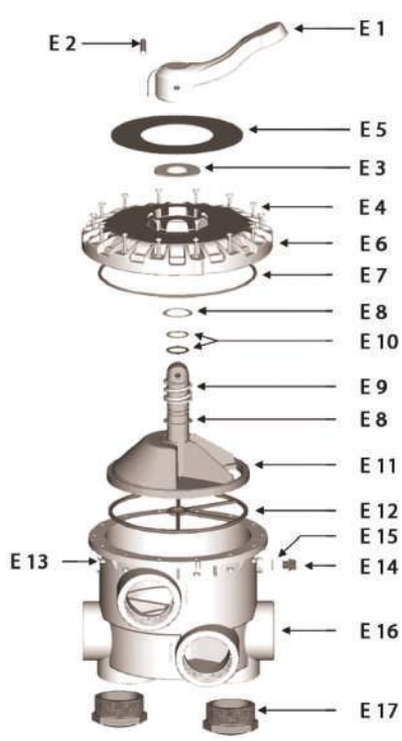

Description	Code	Gross Price €
handle	330-E1	on demand
pin (handle)	330-E2	on demand
teflon ring	330-E3	on demand
screw (M6 x 30)	331-E4	on demand
label	331-E5	on demand
cover	331-E6	on demand
cover-o-ring	330-E7	on demand
o-ring	331-E8	on demand
spring	330-E9	on demand
axle-o-ring	331-E10	on demand
disc	330-E11	on demand
spider gasket	330-E12	on demand
nut M6	331-E13	on demand
gauge nut	331-E14	on demand
gauge nut o-ring	331-E15	on demand
body	331-E16	on demand
plug	331-E17	on demand
top assembly, mounted (E1-E12, less E4+E6)	331-E50	on demand

Technical specifications are subject to change without prior notice.

MIDAS VALVE 4"

Art. 380-OT SIDE MOUNT

Description	Code	Gross Price €
handle	380-E1	on demand
pin (handle)	380-E2	on demand
teflon ring	380-E3	on demand
label	380-E4	on demand
screw (M6 x 30)	380-E5	on demand
cover	380-E6	on demand
cover-o-ring	380-E7	on demand
bolt washer	380-E8	on demand
washer (E/S)	380-E9	on demand
Teflon washer	380-E9A	on demand
nut M6	380-E10	on demand
spring	380-E11	on demand
washer (E/S)	380-E11A	on demand
disc with spider gasket	380-E12	on demand
axle o-ring (2x)	380-E13	on demand
body	380-E14	on demand
plug o-ring	380-E15	on demand
plug	380-E16	on demand
top assembly, mounted (E1-E11, less E4+E7)	380-E50	on demand

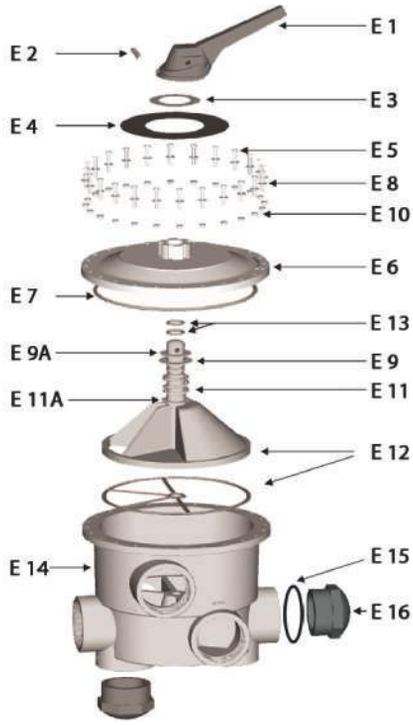

Technical specifications are subject to change without prior notice.

HEAT PUMPS

MIDA.Maxx 11

Art. 2770

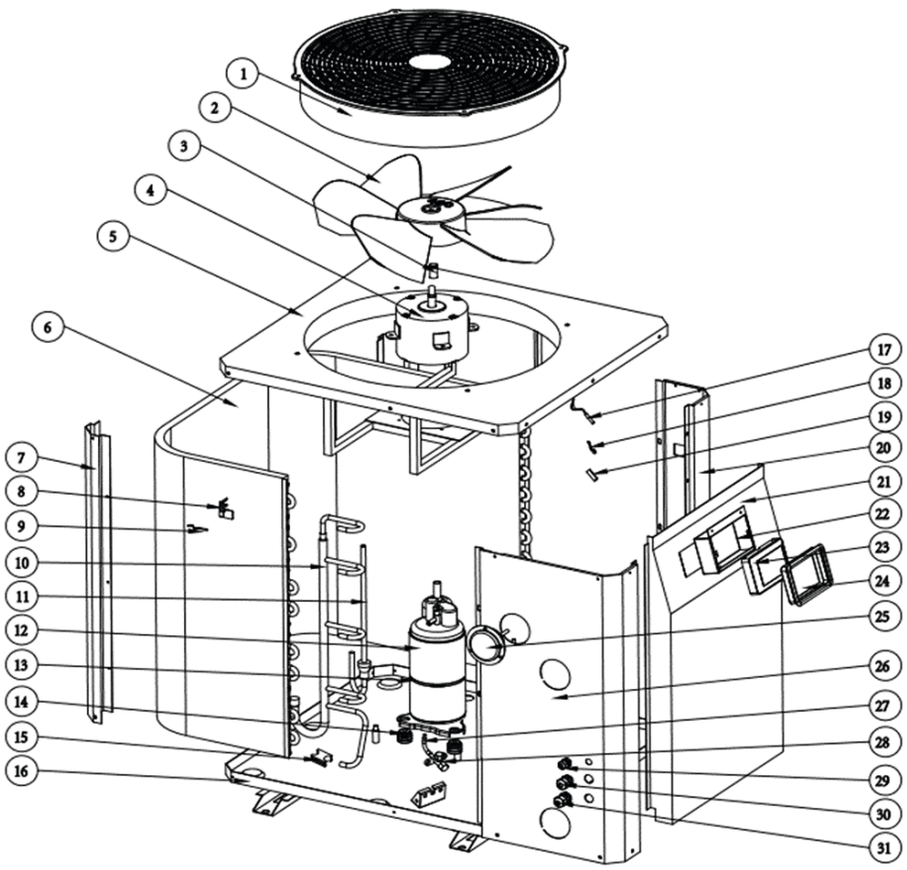

Description	Code	Pos.	Gross Price €
fan	2770-E2	2	on demand
Finned heat exchanger	2770-E6	6	on demand
Outside temperature sensor	2770-E9	9	on demand
Pipe temperature sensor	2770-E17	17	on demand
Controller box	2770-E22	22	on demand
4.3 inches Touching screen controller	2770-E23	23	on demand
Controller Housing	2770-E24	24	on demand
Flow switch	2770-E47	47	on demand
O-ring to the flow switch	2770-E48	48	on demand
Sealing ring for water connection	2770-E49	49	on demand
Cover ring red	2770-E50	50	on demand
Union nut water connection	2770-E51	51	on demand
Temperature sensor water outlet	2770-E52	52	on demand
Cover blue	2770-E54	54	on demand
Temperature sensor water inlet	2770-E55	55	on demand
Titanium heat exchangers	2770-E56	56	on demand
control board	2770-E59	59	on demand
Terminal 5-fold	2770-E62	62	on demand
Controller board	2770-E65	65	on demand
reactor	2770-E68	68	on demand

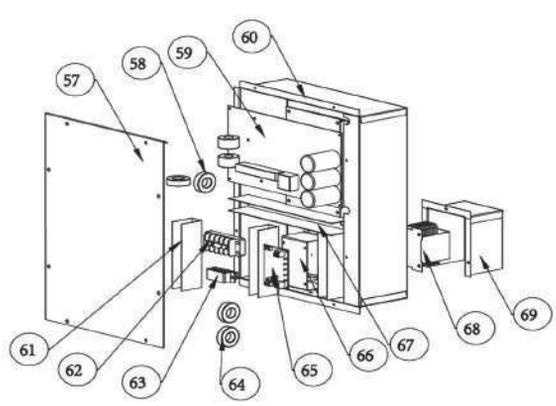

Technical specifications are subject to change without prior notice.

MIDA.Maxx 17

Art. 2771

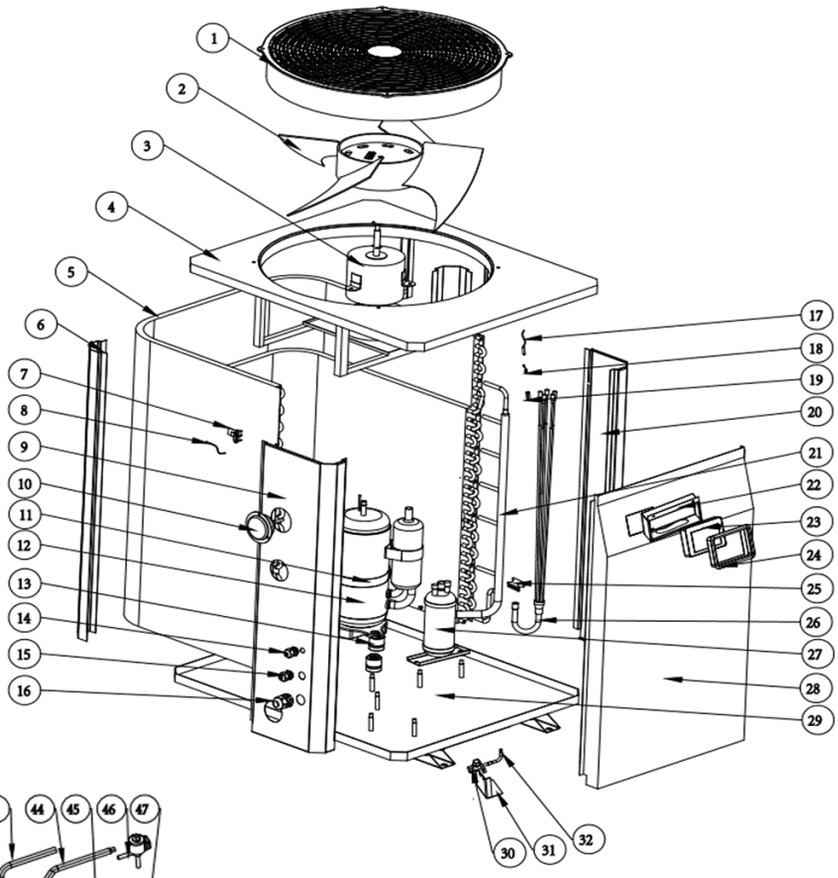

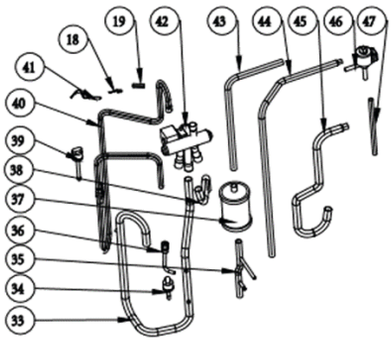

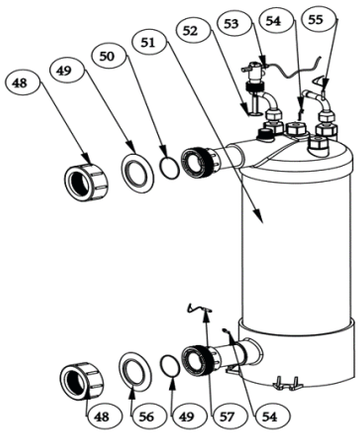

Description	Code	Pos.	Gross Price €
fan	2770-E2	2	on demand
Finned heat exchanger	2770-E5	5	on demand
Outside temperature sensor	2770-E9	9	on demand
Pipe temperature sensor	2770-E17	17	on demand
Controller box	2770-E22	22	on demand
4.3 inches Touching screen controller	2770-E23	23	on demand
Controller Housing	2770-E24	24	on demand
Flow switch	2770-E51	51	on demand
O-ring to the flow switch	2770-E50	50	on demand
Sealing ring for water connection	2770-E49	49	on demand
Cover ring red	2770-E50	51	on demand
Union nut water connection	2770-E48	48	on demand
Temperature sensor water outlet	2770-E47	47	on demand
Cover blue	2770-E52	52	on demand
Temperature sensor water inlet	2770-E54	54	on demand
Titanium heat exchangers	2770-E57	57	on demand
control board	2770-E59	59	on demand
Terminal 5-fold	2770-E65	65	on demand
Controller board	2770-E62	62	on demand
reactor	2770-E68	68	on demand

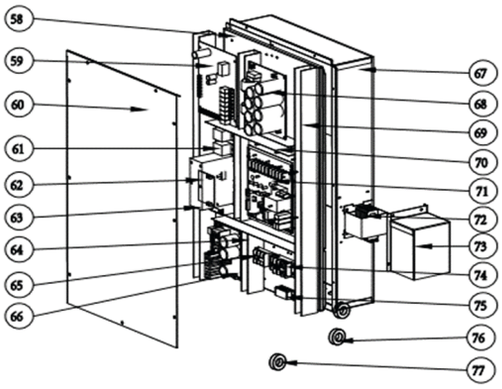

Technical specifications are subject to change without prior notice.

MIDA.Maxx 25

Art. 2772

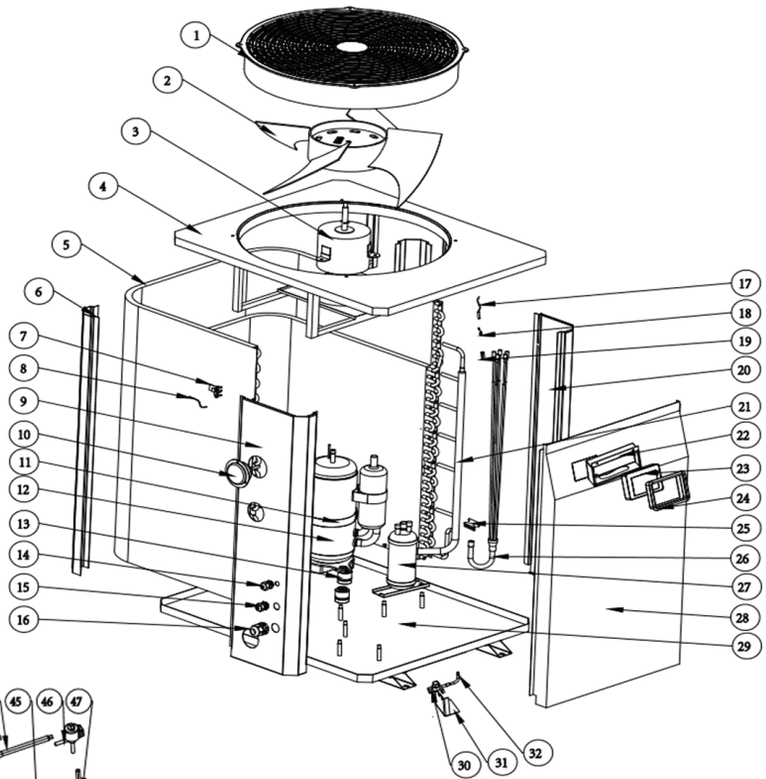

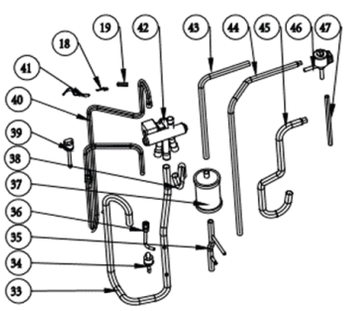

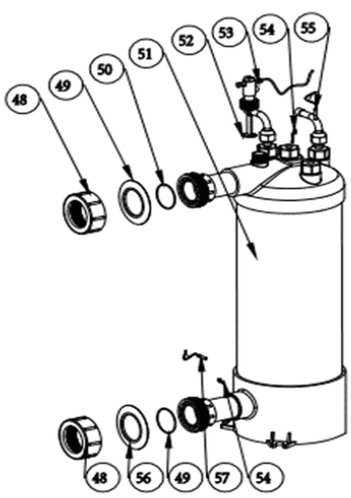

Description	Code	Pos.	Gross Price €
fan	2771-E2	2	on demand
Finned heat exchanger	2772-E5	5	on demand
Outside temperature sensor	2770-E9	9	on demand
Pipe temperature sensor	2770-E17	17	on demand
Controller box	2770-E22	22	on demand
4.3 inches Touching screen controller	2770-E23	23	on demand
Controller Housing	2770-E24	24	on demand
Union nut water connection	2770-E51	51	on demand
Cover ring red	2770-E50	50	on demand
Sealing ring for water connection	2770-E49	49	on demand
Titanium heat exchangers	2772-E51	51	on demand
O-ring to the flow switch	2770-E48	48	on demand
Flow switch	2772-E53	53	on demand
Temperature sensor water outlet	2770-E52	52	on demand
Cover ring blue	2770-E54	54	on demand
Temperature sensor water inlet	2771-E457	57	on demand
control board	2772-E59	59	on demand
relay	2772-E61	61	on demand
Controller board	2770-E65	65	on demand
Power terminal 5-fold	2772-E65	65	on demand
Control board DC fan drive	2772-E66	66	on demand
filter board	2772-E68	68	on demand
driver board	2772-E71	71	on demand
reactor	2772-E72	72	on demand
Connection terminal 3-fold	2772-E74	74	on demand

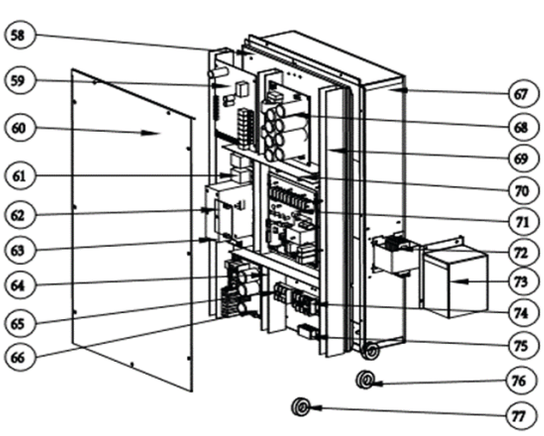

Technical specifications are subject to change without prior notice.

MIDA.Maxx 29

Art. 2773

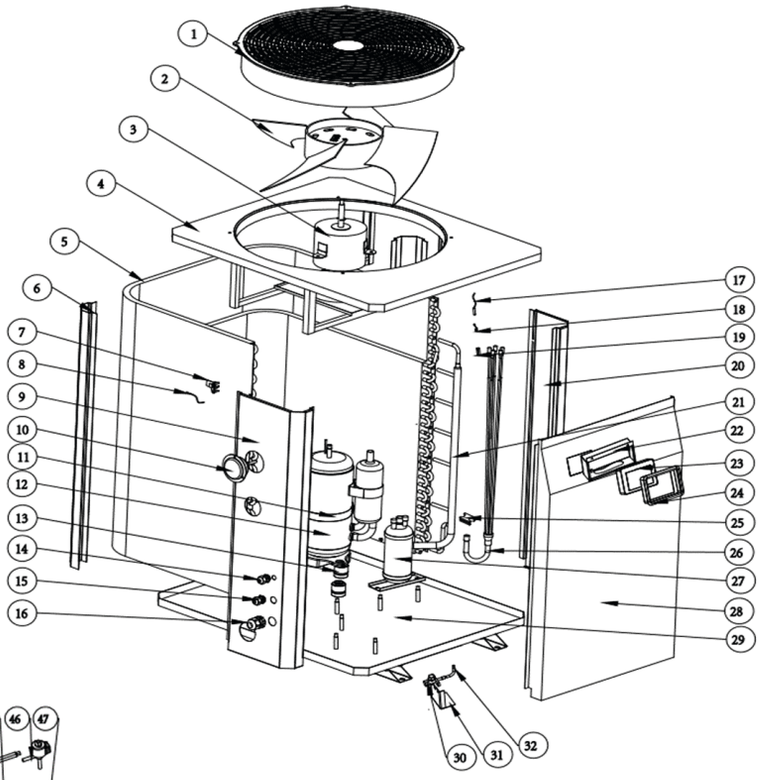

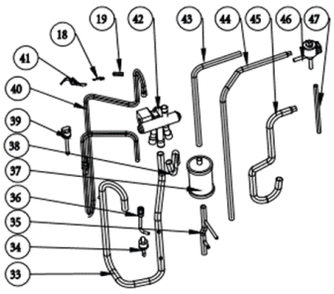

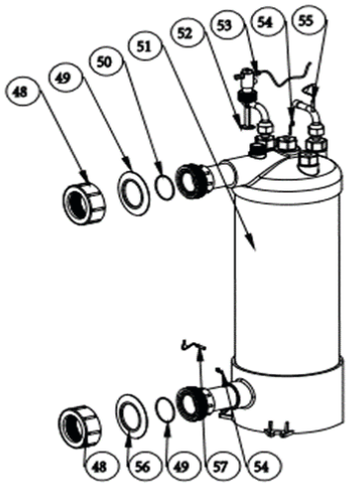

Description	Code	Pos.	Gross Price €
fan	2771-E2	2	on demand
Finned heat exchanger	2773-E5	5	on demand
Outside temperature sensor	2770-E9	9	on demand
Pipe temperature sensor	2770-E17	17	on demand
Controller box	2770-E22	22	on demand
4.3 inches Touching screen controller	2770-E23	23	on demand
Controller Housing	2770-E24	24	on demand
Union nut water connection	2770-E51	51	on demand
Cover ring red	2770-E50	50	on demand
Sealing ring for water connection	2770-E49	49	on demand
Titanium heat exchangers	2773-E51	51	on demand
O-ring to the flow switch	2770-E48	48	on demand
Flow switch	2772-E53	53	on demand
Temperature sensor water outlet	2770-E52	52	on demand
Cover ring blue	2770-E54	54	on demand
Temperature sensor water inlet	2771-E57	57	on demand
control board	2772-E59	59	on demand
relay	2772-E62	61	on demand
Controller board	2770-E65	65	on demand
Power terminal 5-fold	2772-E65	65	on demand
Control board DC fan drive	2772-E66	66	on demand
filter board	2772-E68	68	on demand
driver board	2772-E71	71	on demand
reactor	2772-E72	72	on demand
Connection terminal 3-fold	2772-E74	74	on demand

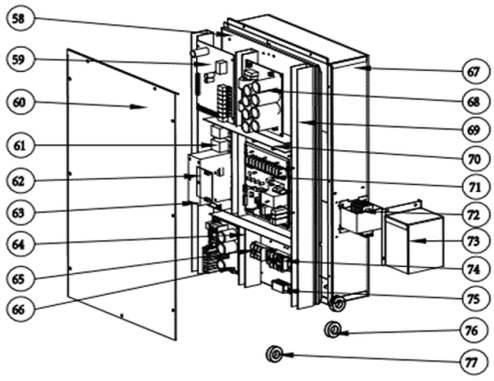

Technical specifications are subject to change without prior notice.

MIDA.Boost 18

Art. 2761

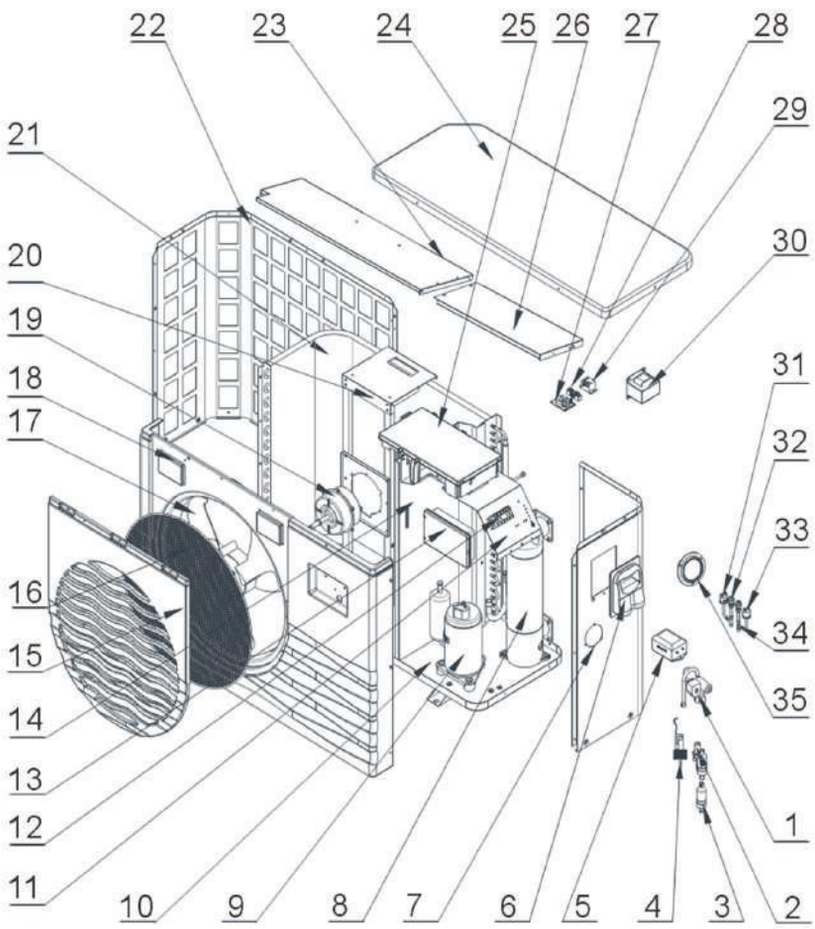

Description	Code	Pos.	Gross Price €
4-way valve and fittings	2670-E11	1	on demand
Electronic expansion Valve	2761-E2	2	on demand
Filter	2670-E7	3	on demand
Flow Switch	2760-E4	4	on demand
EMI Filter	2760-E5	5	on demand
Grommet	2670-E13	6	on demand
Aperture Right	2761-E7	7	on demand
Titanium heat exchangers	2761-E8	8	on demand
compressor	2760-E9	9	on demand
Floor plate	2671-E10	10	on demand
switchbox	2761-E11	11	on demand
Connection terminal (5-fold)	2670-E38	12	on demand
5 "touch screen display	2760-E13	13	on demand
partition wall	2761-E14	14	on demand
Fans protective cover	2761-E15	15	on demand
Fans protective net	2760-E16	16	on demand
fan	2670-E25	17	on demand

Description	Code	Pos.	Gross Price €
front panel	2761-E18	18	on demand
Fan motor	2670-E27	19	on demand
engine support	2761-E20	20	on demand
Finned heat exchanger	2761-E21	21	on demand
guard	2761-E22	22	on demand
support plate	2761-E23	23	on demand
cover	2761-E24	24	on demand
frequency converter	2760-E25	25	on demand
Support plate 2	2761-E26	26	on demand
power adapter	2760-E27	27	on demand
2-bit connection part	2670-E36	28	on demand
relay	2760-E29	29	on demand
transformer	2760-E30	30	on demand
Niderdruckschalter	2670-E9	31	on demand
nozzle needle	2670-E3	32	on demand
High pressure switch	2670-E8	33	on demand
Triplett	2760-E34	34	on demand
pressure indicator	2760-E35	35	on demand

Technical specifications are subject to change without prior notice.

MIDA.Boost 24

Art. 2762

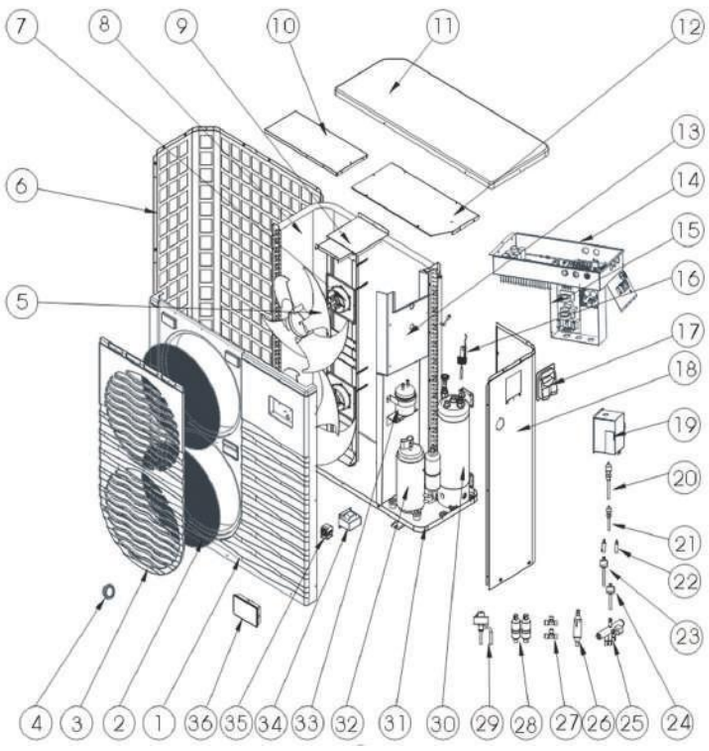

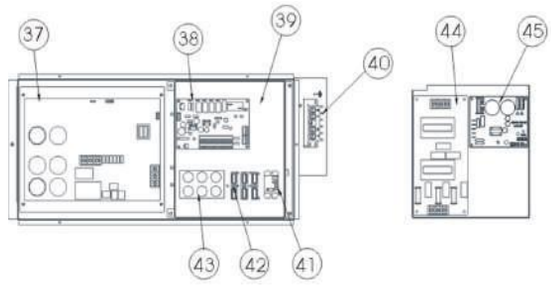

Description	Code	Pos.	Gross Price €
front cover	2673-E4	1	on demand
Fan safety net	2762-E2	2	on demand
Fan protective cover	2673-E4	3	on demand
pressure indicator	2670-E35	4	on demand
fan	2670-E25	5	on demand
guard	2762-E6	6	on demand
fan motor	2670-E27	7	on demand
Finned heat exchanger	2762-E8	8	on demand
Base plate for fan motor	2762-E9	9	on demand
support plate	2762-E10	10	on demand
cover	2762-E11	11	on demand
electronics cover	2762-E12	12	on demand
partition wall	2762-E13	13	on demand
Electronics box	2762-E14	14	on demand
Electronics box	2762-E15	15	on demand
Flow switch	2760-E4	16	on demand
Grommet	2670-E13	17	on demand
Aperture on the right	2762-E18	18	on demand
Electronics box	2762-E19	19	on demand
nozzle needle	2762-E20	20	on demand
nozzle needle	2670-E35	21	on demand
reduction	2762-E22	22	on demand
High pressure switch	2670-E8	23	on demand

Description	Code	Pos.	Gross Price €
Low pressure switch	2670-E9	24	on demand
4-way valve and fittings	2672-E12	25	on demand
check valve	2670-E10	26	on demand
Tee	2670-E4	27	on demand
filter	2670-E7	28	on demand
Electronic Expansion Valve (EEV)	2673-E28	29	on demand
Titanium heat exchangers	2762-E30	30	on demand
baseplate	2762-E31	31	on demand
compressor	2762-E32	32	on demand
liquid container	2762-E33	33	on demand
transformer	2762-E34	34	on demand
three-phase AC monitor	2762-E35	35	on demand
5 "touch screen display	2760-E13	36	on demand
frequency converter	2762-E37	37	on demand
PC 1004 board	2762-E38	38	on demand
connecting plate	2762-E39	39	on demand
Connection terminal (5-fold)	2762-E40	40	on demand
relay	2760-E29	41	on demand
Connection terminal (2-fold)	2670-E37	42	on demand
capacitor plate	2762-E43	43	on demand
filter plate	2762-E44	44	on demand
regulation module	2762-E45	45	on demand

Technical specifications are subject to change without prior notice.

MIDA.Force 7

Art. 2675

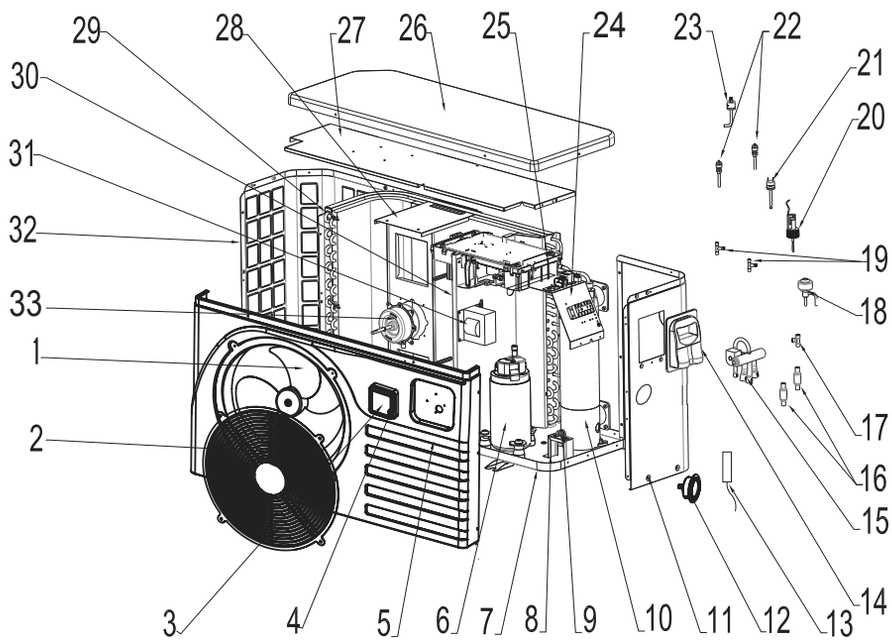

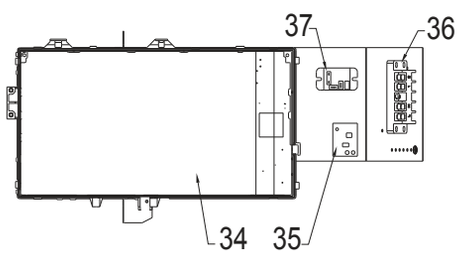

Description	Code	Pos.	Gross Price €
fan	2675-E1	1	on demand
fan cover	2700-E2	2	on demand
Display case	3000-E33	3	on demand
display	2675-E4	4	on demand
front panel	2675-E5	5	on demand
compressor	2675-E6	6	on demand
baseplate	2675-E7	7	on demand
Clamp for copper pipe	2675-E8	8	on demand
Stainless steel pipe connec-tions	2675-E9	9	on demand
Titanium heat exchangers	2675-E10	10	on demand
Aperture on the right	2675-E11	11	on demand
manometer	2675-E12	12	on demand
temperature sensor	2675-E13-600	13	on demand
temperature sensor	2675-E13-480	13	on demand
Grommet	2675-E14	14	on demand
4-way valve and fittings	2670-E11	15	on demand
filter	2675-E16	16	on demand
T-piece	2675-E17	17	on demand
Electronic expansion valve	2675-E18	18	on demand

Description	Code	Pos.	Gross Price €
T-piece	2675-E19	19	on demand
paddle switches	2675-E20	20	on demand
Low pressure switch	2670-E9	21	on demand
nozzle needle	2670-E3	22	on demand
High pressure switch	2670-E8	23	on demand
support plate	2675-E24	24	on demand
Electronic control	2675-E25	25	on demand
cover	2675-E26	26	on demand
lid cover	2675-E27	27	on demand
Fan motor holder	2675-E28	28	on demand
Finned heat exchanger	2675-E29	29	on demand
partition wall	2675-E30	30	on demand
transformer	2675-E31	31	on demand
guard	2675-E32	32	on demand
Fan motor	2675-E33	33	on demand
frequency converter	2675-E34	34	on demand
power adapter	2675-E35	35	on demand
terminal (5 times)	2670-E38	36	on demand
relay	2675-E37	37	on demand

Technical specifications are subject to change without prior notice.

MIDA.Force 12

Art. 2676

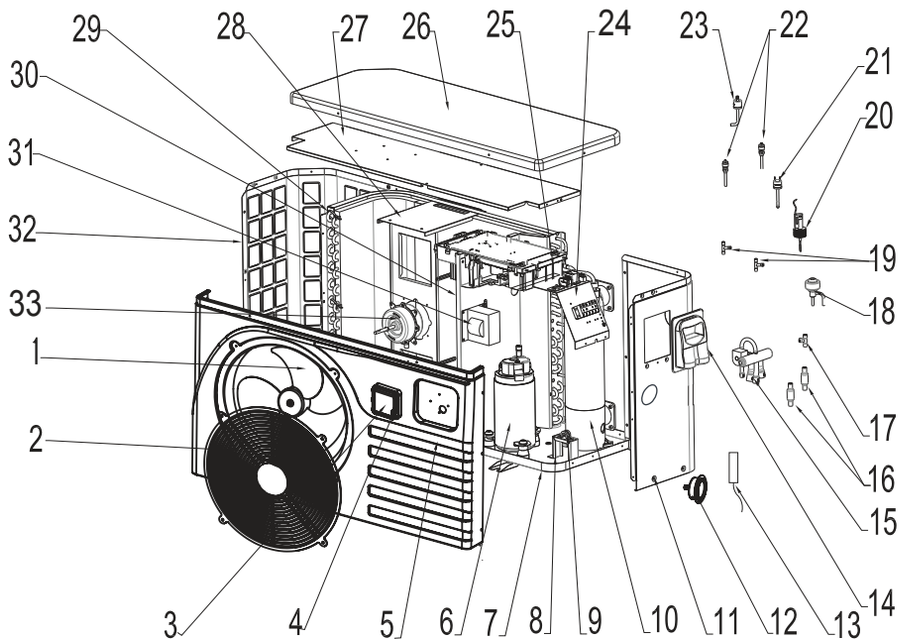

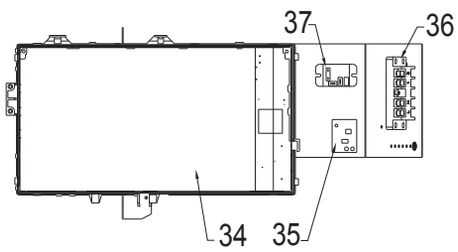

Description	Code	Pos.	Gross Price €
fan	2675-E1	1	on demand
Fans protective cover	2700-E2	2	on demand
Display case	3000-E33	3	on demand
display	2675-E4	4	on demand
front panel	2675-E5	5	on demand
compressor	2675-E6	6	on demand
baseplate	2675-E7	7	on demand
Clamp for copper pipe	2675-E8	8	on demand
Stainless steel pipe connections	2675-E9	9	on demand
Titanium heat exchangers	2801-E18	10	on demand
Aperture on the right	2675-E11	11	on demand
manometer	2675-E12	12	on demand
temperature sensor	2675-E13-600	13	on demand
temperature sensor	2675-E13-480	13	on demand
Grommet	2675-E14	14	on demand
4-way valve and fittings	2670-E11	15	on demand
filter	2675-E16	16	on demand
T-piece	2675-E17	17	on demand
Electronic expansion valve	2675-E18	18	on demand

Description	Code	Pos.	Gross Price €
T-piece	2675-E19	19	on demand
paddle switches	2675-E20	20	on demand
Low pressure switch	2670-E9	21	on demand
nozzle needle	2670-E3	22	on demand
High pressure switch	2670-E8	23	on demand
support plate	2675-E24	24	on demand
Electronic control	2675-E25	25	on demand
cover	2675-E26	26	on demand
lid cover	2675-E27	27	on demand
Fans engine mount	2675-E28	28	on demand
Finned heat exchanger	2676-E29	29	on demand
partition wall	2675-E30	30	on demand
transformer	2675-E31	31	on demand
guard	2675-E32	32	on demand
Fan motor	2675-E33	33	on demand
frequency converter	2675-E34	34	on demand
power adapter	2675-E35	35	on demand
terminal (5 times)	2670-E38	36	on demand
relay	2675-E37	37	on demand

Technical specifications are subject to change without prior notice.

MIDA.Force 17

Art. 2677

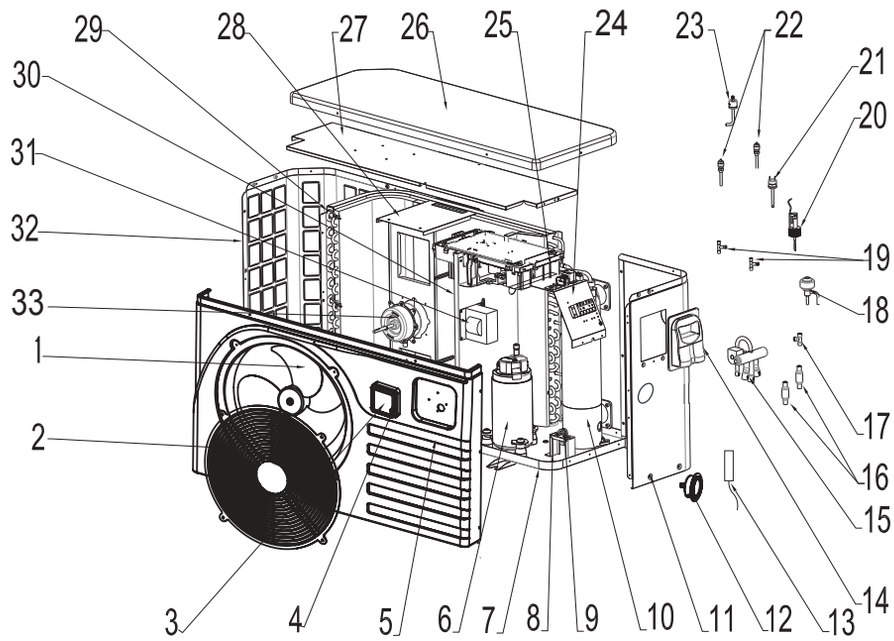

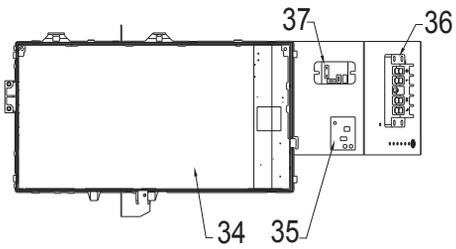

Description	Code	Pos.	Gross Price €
fan	2677-E1	1	on demand
Fans protective cover	2677-E2	2	on demand
Display case	3000-E33	3	on demand
display	2675-E4	4	on demand
front panel	2677-E5	5	on demand
compressor	2677-E6	6	on demand
baseplate	2677-E7	7	on demand
Titanium heat exchangers	2677-E10	10	on demand
Aperture on the right	2677-E11	11	on demand
manometer	2675-E12	12	on demand
temperature sensor	2675-E13-600	13	on demand
temperature sensor	2675-E13-480	13	on demand
Grommet	2675-E14	14	on demand
4-way valve and fittings	2670-E11	15	on demand
filter	2677-E16	16	on demand
T-piece	2675-E17	17	on demand
Electronic expansion valve	2677-E18	18	on demand
T-piece	2675-E19	19	on demand

Description	Code	Pos.	Gross Price €
paddle switches	2675-E20	20	on demand
Low pressure switch	2670-E9	21	on demand
nozzle needle	2670-E3	22	on demand
High pressure switch	2670-E8	23	on demand
support plate	2677-E24	24	on demand
rejector	2677-E25	25	on demand
cover	2677-E26	26	on demand
lid cover	2677-E27	27	on demand
Fans engine mount	2677-E28	28	on demand
Finned heat exchanger	2677-E29	29	on demand
partition wall	2677-E30	30	on demand
transformer	2677-E31	31	on demand
guard	2677-E32	32	on demand
Fan motor	2677-E33	33	on demand
frequency converter	2677-E34	34	on demand
power adapter	2675-E35	35	on demand
terminal (5 times)	2670-E38	36	on demand
Relay	2675-E37	37	on demand

Technical specifications are subject to change without prior notice.

MIDA.Black 8

Art. 2950

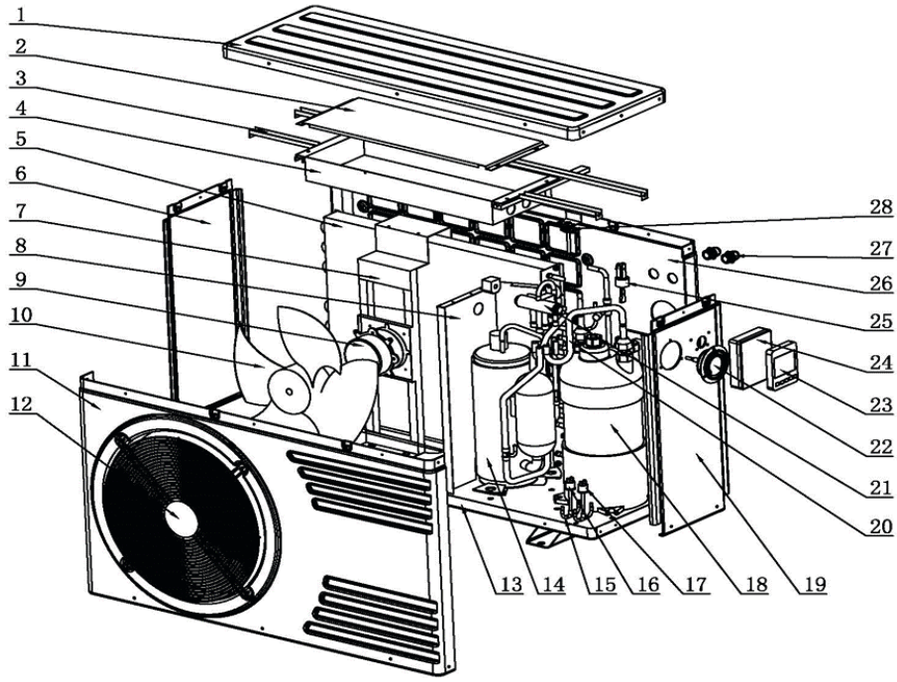

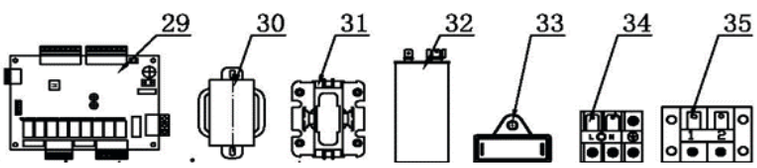

Description	Code	Pos.	Gross Price €
cover	2900-E1	1	on demand
Cover electronics box	2950-E2	2	on demand
cover support	2900-E3	3	on demand
electronics box	2900-E4	4	on demand
Finned heat exchanger	2950-E5	5	on demand
Panel left	2900-E6	6	on demand
Fan motor mount	2900-E7	7	on demand
partition wall	2950-E8	8	on demand
fan motor	2950-E9	9	on demand
fan	2900-E10	10	on demand
front panel	2900-E11	11	on demand
fan protection	2900-E12	12	on demand
baseplate	2950-E13	13	on demand
compressor	2950-E14	14	on demand
pipe connections	2950-E15	15	on demand
High pressure switch	2900-E16	16	on demand
Low pressure switch	2900-E17	17	on demand
Titanium heat exchangers	2950-E18	18	on demand
Aperture on the right	2900-E19	19	on demand
piping	2950-E20	20	on demand
Coil for 4-way valve	2900-E21-1	21	on demand
4-way valve	2900-E21		on demand
manometer	2950-E22	22	on demand
LED display with WiFi	2950-E23	23	on demand
display case	2950-E24	24	on demand
Flow Switch	2900-E25	25	on demand

Description	Code	Pos.	Gross Price €
rear wall	2900-E26	26	on demand
Grommet	2950-27	27	on demand
Filling valve refrigerant	2900-E27	28	on demand
circuit board	2950-E29	29	on demand
transformer	2900-E29	30	on demand
AC contactor for Mida.Black 8-17	2900-E30	31	on demand
compressor condenser	2950-E32	32	on demand
Fan motor capacitor	2900-E32	33	on demand
Terminal block (3-fold)	2950-E34	34	on demand
Connection terminal (2-fold)	2950-E35	35	on demand
Temperature sensor environment	2900-E35	36	on demand
Temperature sensor water (Copper)	2900-E36	37	on demand
Temperature sensor water (Copper)	2900-E36	38	on demand
Screw connection	02357	39	on demand
Silicone O-ring connection verschr.		40	on demand
cap	2950-E41	41	on demand
rubber buffers	2670-E45	42	on demand
Display extension cable 10 m	2900-E44	43	on demand
Winter cover 990 * 360 * 605mm	2613	44	on demand
Housing for compressor relay	2950-E44	45	on demand
housing cover	2950-E45	46	on demand
WIFI modules (with timer)	2602	47	on demand

Technical specifications are subject to change without prior notice.

MIDA.Black 11

Art. 2951

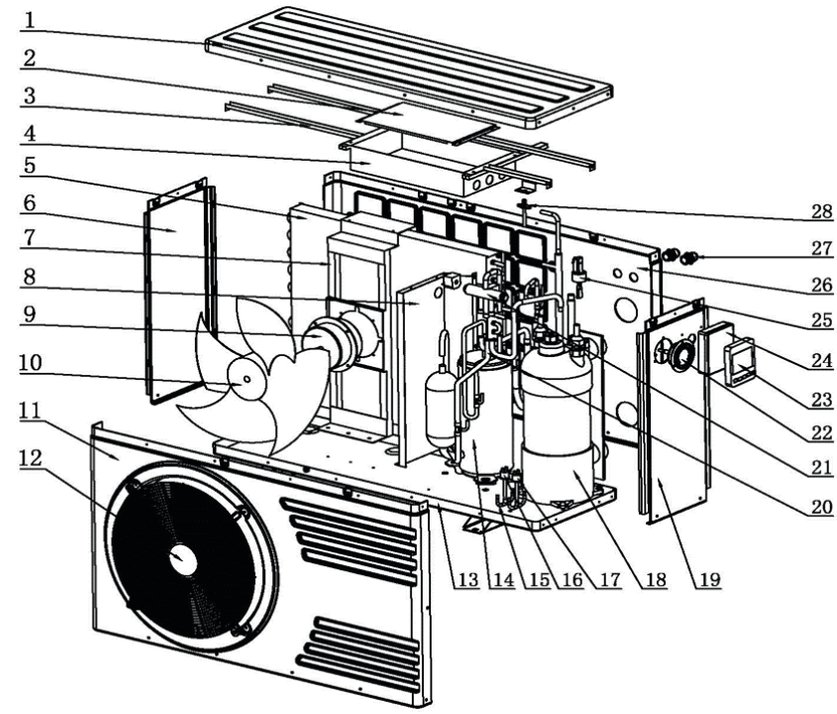

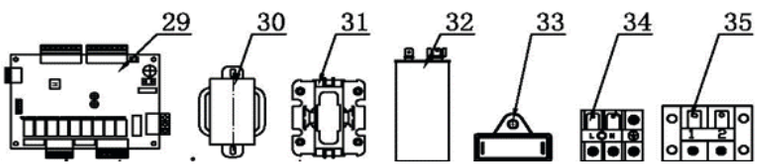

Description	Code	Pos.	Gross Price €
cover	2901-E1	1	on demand
Cover electronics box	2951-E2	2	on demand
cover support	2901-E3	3	on demand
electronics box	2901-E4	4	on demand
Finned heat exchanger	2951-E5	5	on demand
Panel left	2901-E6	6	on demand
Fan motor mount	2901-E7	7	on demand
partition wall	2951-E8	8	on demand
fan motor	2951-E9	9	on demand
fan	2951-E10	10	on demand
front panel	2901-E11	11	on demand
fan protection	2901-E12	12	on demand
baseplate	2951-E13	13	on demand
compressor	2951-E14	14	on demand
pipe connections	2950-E15	15	on demand
High pressure switch	2900-E16	16	on demand
Low pressure switch	2900-E17	17	on demand
Titanium heat exchangers	2951-18	18	on demand
Aperture on the right	2901-E19	19	on demand
piping	2951-E20	20	on demand
Coil for 4-way valve	2900-E21-1	21	on demand
4-way valve	2900-E21		on demand
manometer	2950-E22	22	on demand
LED display with WiFi	2950-E23	23	on demand
display case	2950-E24	24	on demand
Flow Switch	2900-E25	25	on demand

Description	Code	Pos.	Gross Price €
rear wall	2901-E26	26	on demand
Grommet	2950-E27	27	on demand
Filling valve refrigerant	2900-E27	28	on demand
circuit board	2950-E29	29	on demand
transformer	2900-E29	30	on demand
AC contactor for Mida.Black 8-17	2900-E30	31	on demand
compressor condenser	2951-E32	32	on demand
Fan motor capacitor	2901-E32	33	on demand
Terminal block (3-fold)	2950-E34	34	on demand
Connection terminal (2-fold)	2950-E35	35	on demand
Temperature sensor environment	2900-E35	36	on demand
Temperature sensor water (Copper)	2900-E36	37	on demand
Temperature sensor water (Copper)	2900-E36	38	on demand
Screw connection	02357	39	on demand
Silicone O-ring connection verschr.	2950-E40	40	on demand
cap	2950-E41	41	on demand
rubber buffers	2670-E45	42	on demand
Display extension cable 10 m	2900-E44	43	on demand
Winter cover 1060 * 370 * 640mm	2614	44	on demand
Housing for compressor relay	2951-E45	45	on demand
housing cover	2951-E46	46	on demand
WIFI modules (with timer	2602	47	on demand

Technical specifications are subject to change without prior notice.

MIDA.Black 14

Art. 2952

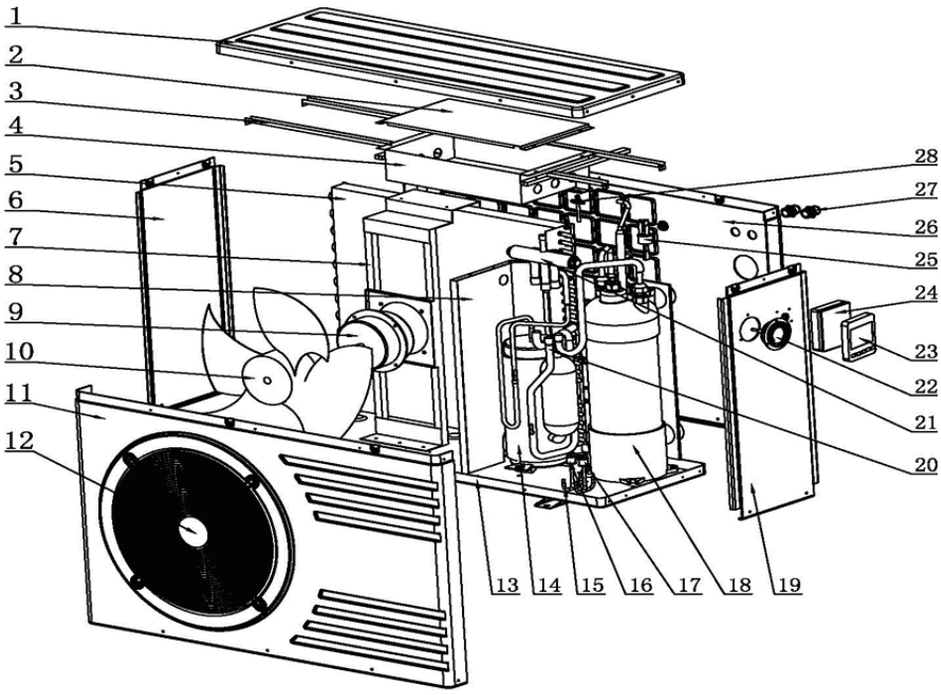

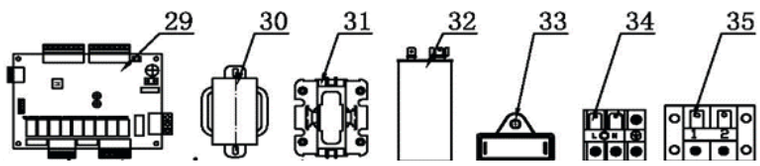

Description	Code	Pos.	Gross Price €
cover	2903-E1	1	on demand
Cover electronics box	2903-E2	2	on demand
cover support	2903-E3	3	on demand
electronics box	2952-E4	4	on demand
Finned heat exchanger	2952-E5	5	on demand
Panel left	2903-E6	6	on demand
Fan motor mount	2903-E7	7	on demand
partition wall	2952-E8	8	on demand
fan motor	2952-E9	9	on demand
fan	2903-E10	10	on demand
front panel	2903-E11	11	on demand
fan protection	2903-E11	12	on demand
baseplate	2952-E13	13	on demand
compressor	2952-E14	14	on demand
pipe connections	2950-E15	15	on demand
High pressure switch	2900-E16	16	on demand
Low pressure switch	2900-E17	17	on demand
Titanium heat exchangers	2952-E19	18	on demand
Aperture on the right	2903-E19	19	on demand
piping	2952-E20	20	on demand
Coil for 4-way valve	2903-E21-1	21	on demand
4-way valve	2903-E21		on demand
manometer	2950-E22	22	on demand
LED display with WiFi	2950-E23	23	on demand
display case	2950-E24	24	on demand
Flow Switch)	2900-E25	25	on demand

Description	Code	Pos.	Gross Price €
rear wall	2901-E26	26	on demand
Grommet	2950-E27	27	on demand
Filling valve refrigerant	2900-E27	28	on demand
circuit board	2950-E29	29	on demand
transformer	2900-E29	30	on demand
AC contactor for Mida.Black 8-17	2900-E30	31	on demand
compressor condenser	2952-E32	32	on demand
Fan motor capacitor	2901-E32	33	on demand
Terminal block (3-fold)	2950-E34	34	on demand
Connection terminal (2-fold)	2950-E35	35	on demand
Temperature sensor environment	2900-E35	36	on demand
Temperature sensor water (Copper)	2900-E36	37	on demand
Temperature sensor water (Copper)	2900-E36	38	on demand
Screw connection	02357	39	on demand
Silicone O-ring connection verschr.	2950-E40	40	on demand
cap	2950-E41	41	on demand
rubber buffers	2670-E45	42	on demand
Display extension cable 10 m	2900-E44	43	on demand
Winter cover 1120 * 420 * 730mm	2615	44	on demand
Housing for compressor relay	2950-E44	45	on demand
housing cover	2950-E45	46	on demand
WIFI modules (with timer)	2602	47	on demand

Technical specifications are subject to change without prior notice.

MIDA.Black 17

Art. 2953

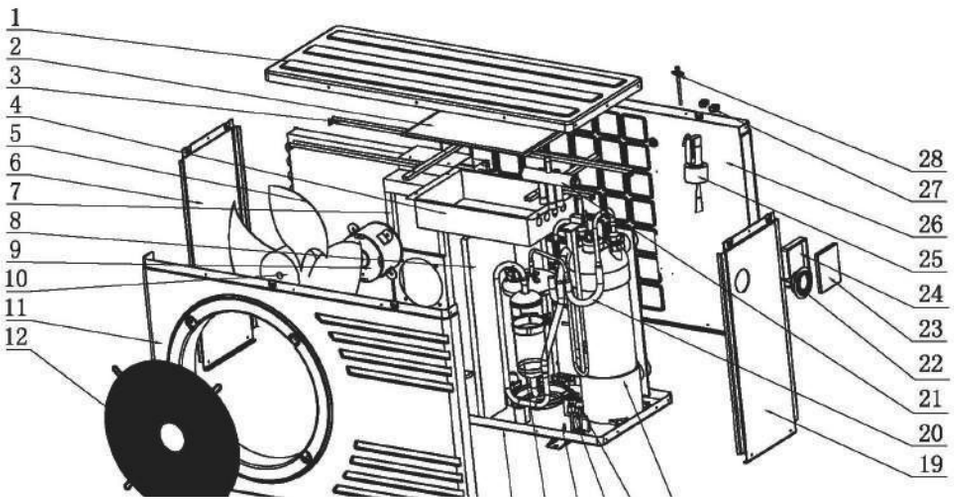

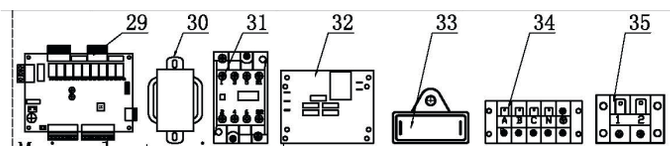

Description	Code	Pos.	Gross Price €
cover	2903-E1	1	on demand
Cover electronics box	2903-E2	2	on demand
cover support	2903-E3	3	on demand
electronics box	2953-E4	4	on demand
Finned heat exchanger	2953-E5	5	on demand
Panel left	2903-E6	6	on demand
Fan motor mount	2904-E7	7	on demand
partition wall	2953-E8	8	on demand
fan motor	2953-E9	9	on demand
fan	2904-E10	10	on demand
front panel	2901-E11	11	on demand
fan protection	2904-E12	12	on demand
baseplate	2953-E13	13	on demand
compressor	2953-E14	14	on demand
pipe connections	2950-E15	15	on demand
High pressure switch	2900-E16	16	on demand
Low pressure switch	2900-E17	17	on demand
Titanium heat exchangers	2953-E18	18	on demand
Aperture on the right	2903-E19	19	on demand
piping	2953-E20	20	on demand
Coil for 4-way valve	2903-E21-1	21	on demand
4-way valve	2903-E21		on demand
manometer	2950-E22	22	on demand
LED display with WiFi	2950-E23	23	on demand
display case	2950-E24	24	on demand
Flow Switch	2900-E25	25	on demand

Description	Code	Pos.	Gross Price €
rear wall	2901-E26	26	on demand
Grommet	2950-27	27	on demand
Filling valve refrigerant	2900-E27	28	on demand
circuit board	2950-E29	29	on demand
transformer	2900-E29	30	on demand
Three-phase AC contactor	2953-E31	31	on demand
compressor condenser	2904-E32	32	on demand
Fan motor capacitor	2904-E33	33	on demand
Terminal block (3-fold)	2950-E34	34	on demand
Connection terminal (2-fold)	2950-E35	35	on demand
Temperature sensor environ-ment	2900-E35	36	on demand
Temperature sensor water (Copper)	2900-E36	37	on demand
Temperature sensor water (Copper)	2900-E36	38	on demand
Screw connection	02357	39	on demand
Silicone O-ring connection fitting	2950-E40	40	on demand
cap	2950-E41	41	on demand
rubber buffers	2670-E45	42	on demand
Display extension cable 10 m	2900-E44	43	on demand
Winter cover 1120 * 420 * 730mm	2615	44	on demand
Housing for compressor relay	2953-E44	45	on demand
housing cover	2953-E45	46	on demand
WIFI modules (with timer)	2602	47	on demand

Technical specifications are subject to change without prior notice.

MIDA.Black 21

Art. 2954

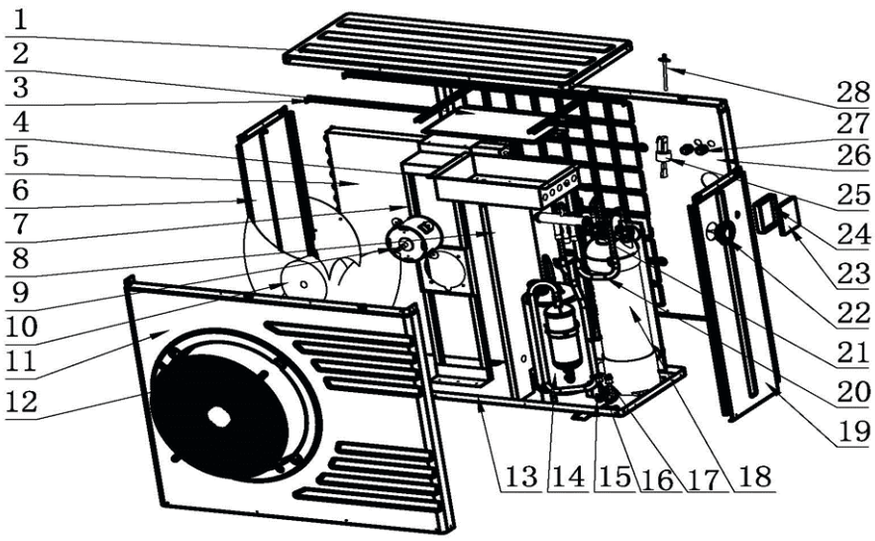

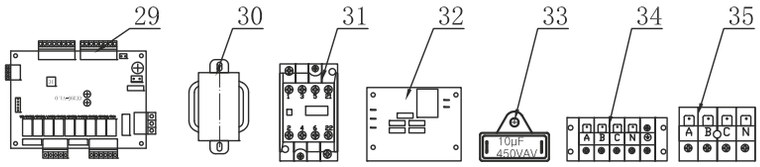

Description	Code	Pos.	Gross Price €
cover	2905-E1	1	on demand
Cover electronics box	2954-E2	2	on demand
cover support	2905-E3	3	on demand
electronics box	2954-E4	4	on demand
Finned heat exchanger	2954-E5	5	on demand
Panel left	2905-E6	6	on demand
Fan motor mount	2905-E7	7	on demand
partition wall	2954-E8	8	on demand
fan motor	2954-E9	9	on demand
fan	2905-E10	10	on demand
front panel	2905-E11	11	on demand
fan protection	2905-E12	12	on demand
baseplate	2905-E13	13	on demand
compressor	2954-E14	14	on demand
pipe connections	2950-E15	15	on demand
High pressure switch	2900-E16	16	on demand
Low pressure switch	2900-E17	17	on demand
Titanium heat exchangers	2954-E18	18	on demand
Aperture on the right	2905-E20	19	on demand
piping	2954-E20	20	on demand
Coil for 4-way valve	2954-E21	21	on demand
4-way valve	2903-E21		on demand
manometer	2950-E22	22	on demand
LED display with WiFi	2950-E23	23	on demand
display case	2950-E24	24	on demand
Flow Switch	2900-E25	25	on demand

Description	Code	Pos.	Gross Price €
rear wall	2905-E27	26	on demand
Grommet	2950-E27	27	on demand
Filling valve refrigerant	2900-E27	28	on demand
circuit board	2950-E29	29	on demand
transformer	2900-E29	30	on demand
Three-phase AC contactor	2954-E31	31	on demand
Phase protection board	2954-E32	32	on demand
Fan motor capacitor	2904-E33	33	on demand
Connection terminal (5-fold)	2905-E34	34	on demand
Connection terminal (2-fold)	2950-E35	35	on demand
Temperature sensor environment	2905-E36	36	on demand
temperature sensor Water (Cu)	2900-E36	37	on demand
temperature sensor Water (Cu) 2m	2905-E38	38	on demand
Screw connection	02357	39	on demand
Silicone O-ring connection fitting	2950-E40	40	on demand
cap	2950-E41	41	on demand
rubber buffers	2670-E45	42	on demand
Display extension cable 10 m	2900-E44	43	on demand
Winter cover 1120 * 420 * 730mm	2616	44	on demand
Housing for compressor relay	2953-E44	45	on demand
housing cover	2953-E45	46	on demand
WIFI modules (with timer)	2602	47	on demand

Technical specifications are subject to change without prior notice.

MIDA.Black 26

Art. 2955

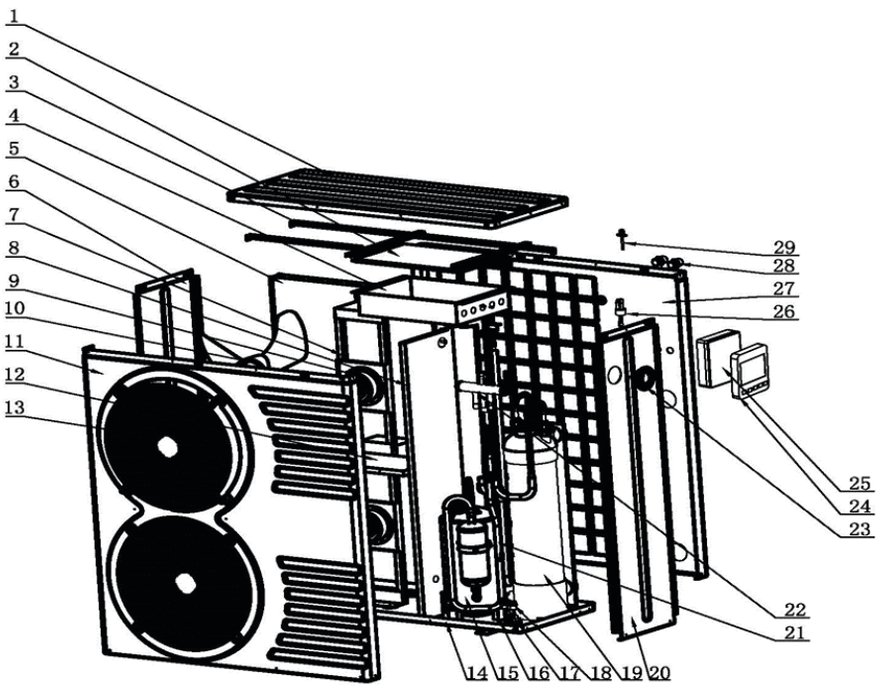

Description	Code	Pos.	Gross Price €
cover	2905-E1	1	on demand
Cover electronics box	2954-E2	2	on demand
cover support	2905-E3	3	on demand
electronics box	2954-E4	4	on demand
Finned heat exchanger	2955-E5	5	on demand
Panel left	2609-E9	6	on demand
Fan motor mount	2906-E5	7	on demand
partition wall	2955-E8	8	on demand
fan motor	2955-E9	9	on demand
fan	2906-E8	10	on demand
front panel	2906-E12	11	on demand
Front panel connection plate	2906-E11	12	on demand
fan protection	2906-E13	13	on demand
baseplate	2955-E14	14	on demand
compressor	2955-E15	15	on demand
pipe connections	2950-E15	16	on demand
High pressure switch	2900-E16	17	on demand
Low pressure switch	2900-E17	18	on demand
Titanium heat exchangers	2955-E19	19	on demand
Housing cover right	2906-E21	20	on demand
piping	2955-E21	21	on demand
Coil for 4-way valve	2955-E22	22	on demand
4-way valve	2903-E21		on demand
manometer	2950-E22	23	on demand
LED display with WiFi	2950-E23	24	on demand
display case	2950-E24	25	on demand

Description	Code	Pos.	Gross Price €
Flow Switch	2900-E25	26	on demand
Filling valve refrigerant	2900-E27	27	on demand
Grommet	2950-E27	28	on demand
rear wall	2906-E29	29	on demand
circuit board	2950-E29	30	on demand
transformer	2900-E29	31	on demand
Three-phase AC contactor	2954-E31	32	on demand
Phase protection board	2954-E32	33	on demand
Fan motor capacitor	2904-E33	34	on demand
Connection terminal (5-fold)	2905-E34	35	on demand
Connection terminal (2-fold)	2950-E35	36	on demand
Temperature sensor environment	2900-E35	37	on demand
temperature sensor Water (Cu)	2900-E36	38	on demand
temperature sensor Water (Cu) 2,2m	2606-E39	39	on demand
Screw connection	02357	40	on demand
Silicone O-ring connection verschr.	2950-E40	41	on demand
rubber buffers	2670-E45	42	on demand
Display extension cable 10 m	2900-E44	43	on demand
Winter cover 1120 * 450 * 1280mm	2617	44	on demand
Housing for compressor relay	2953-E44	45	on demand
housing cover	2953-E45	46	on demand
WIFI modules (with timer)	2602	47	on demand

Technical specifications are subject to change without prior notice.

MIDA.Quick 4

Art. 2700

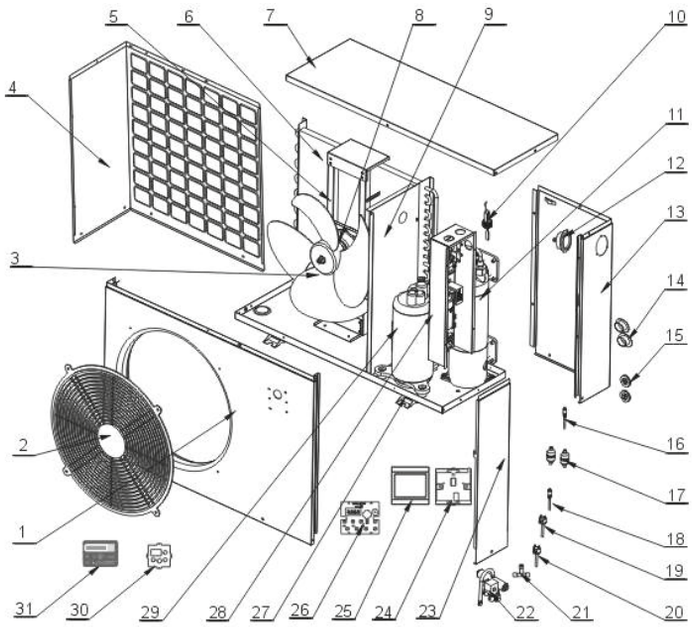

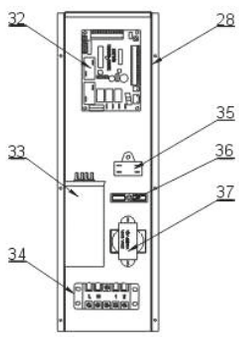

Description	Code	Pos.	Gross Price €
front panel	2700-E1	1	on demand
fan protection	2700-E2	2	on demand
fan	2700-E3	3	on demand
Panel left	2700-E4	4	on demand
Fan motor mount	2700-E5	5	on demand
Finned heat exchanger	2700-E6	6	on demand
cover	2700-E7	7	on demand
fan motor	2700-E8	8	on demand
partition wall	2700-E9	9	on demand
Flow switch	2670-E16	10	on demand
Titanium heat exchangers	2700-E19	11	on demand
manometer	2700-E12	12	on demand
Aperture on the right	2700-E13	13	on demand
Waterproof cover	2700-E14	14	on demand
Cable gland	2700-E15	15	on demand
valve needle	2700-E16	16	on demand
filter	2700-E17	17	on demand
valve needle	2700-E18	18	on demand
High pressure switch	2670-E8	19	on demand
Low pressure switch	2670-E9	20	on demand
T-piece	2700-E21	21	on demand

Technical specifications are subject to change without prior notice.

MIDA.Quick 7

Art. 2708

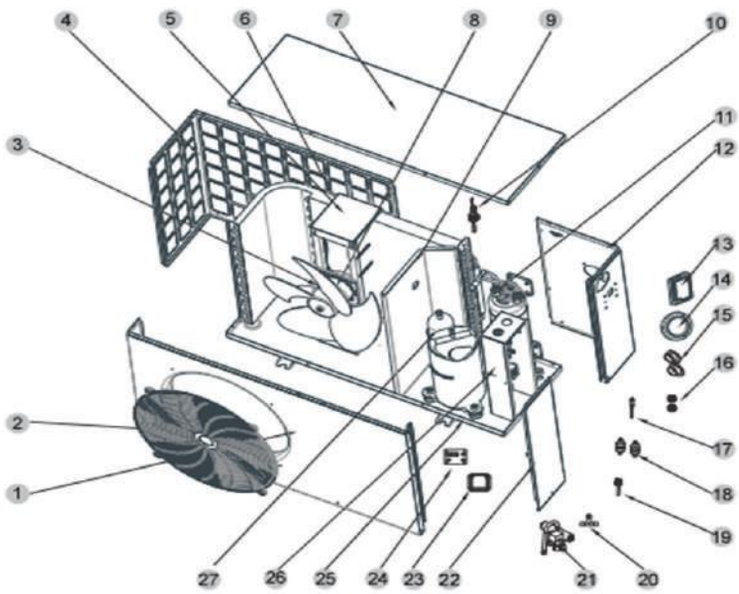

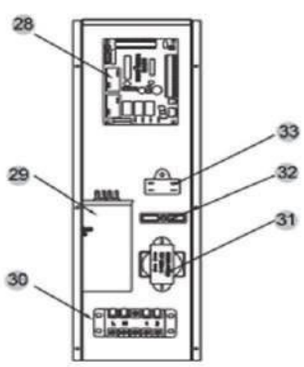

Description	Code	Pos.	Gross Price €
front panel	2701-E1	1	on demand
fan protection	2700-E2	2	on demand
fan	2700-E3	3	on demand
Panel left	2701-E4	4	on demand
Fan motor mount	2708-E5	5	on demand
Finned heat exchanger	2701-E5	6	on demand
cover	2700-E7	7	on demand
fan motor	2700-E8	8	on demand
partition wall	2708-E9	9	on demand
Flow Switch	2670-16	10	on demand
Titanium heat exchangers	2701-E11	11	on demand
Aperture on the right	2701-E12	12	on demand
Display case	2700-E25	13	on demand
manometer	2700-E12	14	on demand
Waterproof cover	2700-E14	15	on demand
Cable gland	2701-E16	16	on demand
valve needle	2700-E18	17	on demand

Description	Code	Pos.	Gross Price €
filter	2708-E18	18	on demand
Low pressure switch	2670-E9	19	on demand
Tee	2700-E21	20	on demand
4-way valve	3000-E21	21	on demand
electronics cover	2708-E22	22	on demand
LED display	2700-E22	23	on demand
LED display lower part	2700-E22	24	on demand
baseplate	2708-E25	25	on demand
electronics box	2700-E28	26	on demand
compressor	2701-E27	27	on demand
PCB PC1001 2700-E32	2700-E32	28	on demand
Compressor condenser 35µF	3000-E26	29	on demand
Connection terminal (5-fold)	3000-E31	30	on demand
transformer	2800-E39	31	on demand
Connection terminal (2-fold)	3001-E28	32	on demand
Fan capacitor 2µF	3000-E27	33	on demand

Technical specifications are subject to change without prior notice.

MIDA.Quick 10

Art. 2703

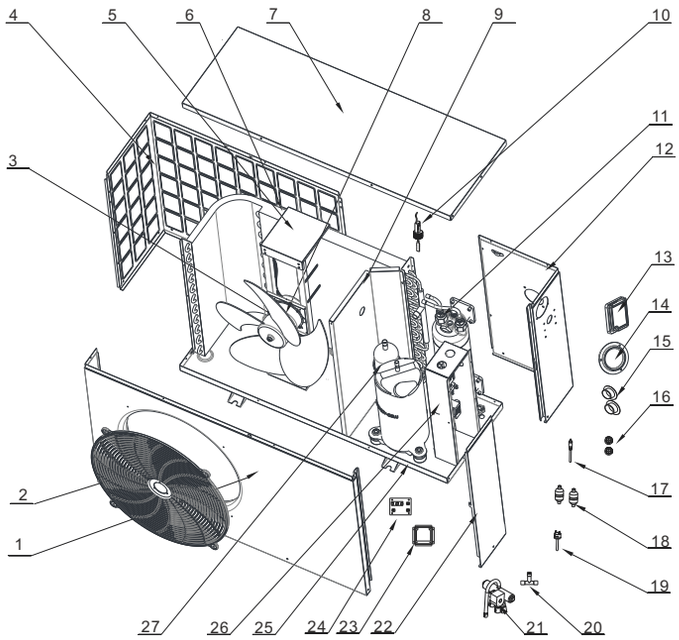

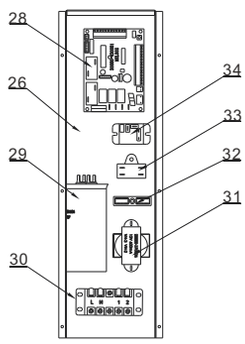

Description	Code	Pos.	Gross Price €
front panel	2703-E7	1	on demand
fan protection	2703-E2	2	on demand
fan	2703-E3	3	on demand
Panel left	2702-E4	4	on demand
Fan motor mount	2703-E5	5	on demand
Finned heat exchanger	2703-E6	6	on demand
cover	2702-E7	7	on demand
fan motor	2801-E5	8	on demand
partition wall	2702-E9	9	on demand
Flow switch	2670-E16	10	on demand
Titanium heat exchangers	2702-E11	11	on demand
Aperture on the right	2702-E12	12	on demand
Waterproof cover	2700-E14	13	on demand
Cable gland	2700-E15	14	on demand
manometer	2700-E12	15	on demand
valve needle	3000-E22	16	on demand
filter	2703-E17	17	on demand
Low pressure switch	2670-E9	18	on demand
Tee	2700-E21	19	on demand
4-way valve	2703-E20	20	on demand

Description	Code	Pos.	Gross Price €
LED display	2700-E22	21, 23, 24	on demand
electronics cover	2702-E22	22	on demand
baseplate	2703-E25	25	on demand
electronics box	2703-E26	26	on demand
compressor	2703-E27	27	on demand
PCB PC1001	2700-E32	28	on demand
compressor condenser	2800-E26	29	on demand
Connection terminal (5-fold)	3000-E31	30	on demand
transformer	2800-E39	31	on demand
Connection terminal (2-fold)	3001-E28	32	on demand
Fan motor capacitor	3001-E29	33	on demand
relay	2670-E37	34	on demand
not illustrated			
Display extension cable 10m	3000-E32		on demand
display case	3000-E33		on demand
temperature sensor	2670-E42		on demand
Screw connection 1½" x 50 mm	02357		on demand

Technical specifications are subject to change without prior notice.

MIDA.Quick 13

Art. 2704

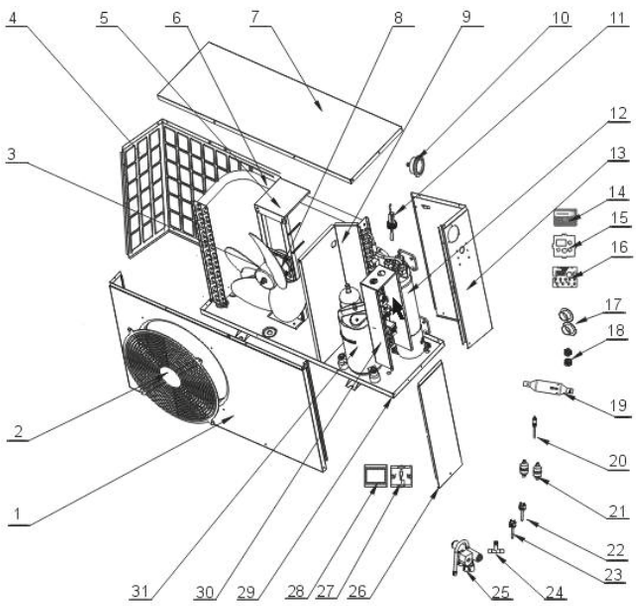

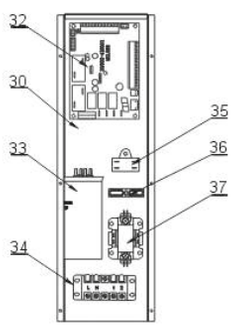

Description	Code	Pos.	Gross Price €
front panel	2703-E7	1	on demand
fan protection	2703-E2	2	on demand
fan	2703-E3	3	on demand
Panel left	2702-E4	4	on demand
Fan motor mount	2703-E5	5	on demand
Finned heat exchanger	2703-E6	6	on demand
cover	2702-E7	7	on demand
fan motor	2801-E5	8	on demand
partition wall	2702-E9	9	on demand
manometer	2700-E12	10	on demand
Flow switch	2670-E16	11	on demand
Titanium heat exchangers	2704-E17	12	on demand
Aperture on the right	2702-E12	13	on demand
LED display	2700-E22	14, 15, 16, 27, 28	on demand
Waterproof cover	2700-E14	17	on demand
Cable gland	2700-E15	18	on demand
throttle	2704-E19	19	on demand
valve needle	3000-E22	20	on demand
filter	2703-E17	21	on demand
Low pressure switch	2670-E9	22	on demand

Description	Code	Pos.	Gross Price €
High pressure switch	2670-E8	23	on demand
T-piece	2700-E21	24	on demand
4-way valve	2704-E25	25	on demand
electronics cover	2704-E26	26	on demand
baseplate	2704-E29	29	on demand
electronics box	2704-E30	30	on demand
compressor	2704-E31	31	on demand
PCB PC1001	2700-E32	32	on demand
compressor condenser	2800-E26	33	on demand
Connection terminal (5-fold)	3000-E31	34	on demand
compressor protection	2802-E31	35	on demand
Connection terminal (2-fold)	3001-E28	36	on demand
Ventilatormotoren-capacitor	3001-E29	37	on demand
not illustrated			
Display extension cable 10m	3000-E32		on demand
display case	3000-E33		on demand
temperature sensor	2670-E42		on demand
Screw connection 1½" x 50 mm	02357		on demand

Technical specifications are subject to change without prior notice.

MIDA.Quick 17

Art. 2705

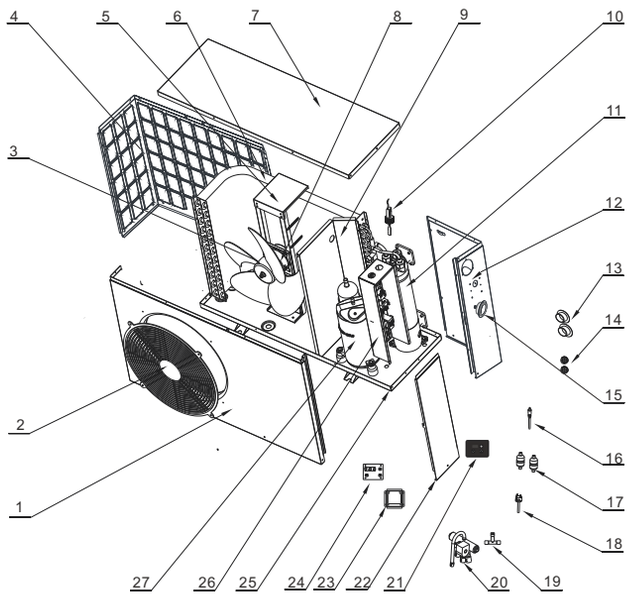

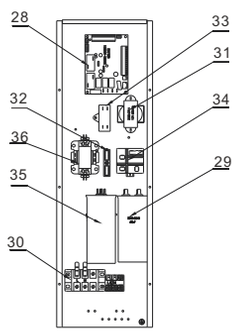

Description	Code	Pos.	Gross Price €
front panel	2705-E1	1	on demand
fan protection	2703-E2	2	on demand
fan	2703-E3	3	on demand
Panel left	2705-E4	4	on demand
Fan motor mount	2705-E5	5	on demand
Finned heat exchanger	2705-E6	6	on demand
cover	2705-E7	7	on demand
fan motor	2801-E5	8	on demand
partition wall	2705-E9	9	on demand
Flow Switch	2670-E16	10	on demand
Titanium heat exchangers	2705-E19	11	on demand
Aperture on the right	2705-E12	12	on demand
Waterproof cover	2700-E14	13	on demand
Cable gland	2700-E15	14	on demand
manometer	2700-E12	15	on demand
valve needle	3000-E22	16	on demand
filter	2703-E17	17	on demand
Low pressure switch	2670-E9	18	on demand
Tee	2700-E21	19	on demand
4-way valve	2670-E11	20	on demand
LED display	2700-E22	21, 23, 24	on demand

Description	Code	Pos.	Gross Price €
electronics cover	2705-E22	22	on demand
baseplate	2705-E25	25	on demand
electronics box	2705-E26	26	on demand
compressor	2705-E27	27	on demand
PCB PC1001	2700-E32	28	on demand
Compressor condenser	2800-E26	29	on demand
Terminal block (3-fold)	2705-E30	30	on demand
transformer	2800-E39	31	on demand
Connection terminal (2-fold)	3001-E28	32	on demand
Ventilatormotoren-capacitor	3001-E29	33	on demand
relay	2705-E34	34	on demand
Compressor condenser	3000-E35	35	on demand
compressor protection	2802-E31	36	on demand
not illustrated			
Display extension cable 10m	3000-E32		on demand
display case	3000-E33		on demand
temperature sensor	2670-E42		on demand
Screw connection 1½" x 50 mm	02357		on demand

Technical specifications are subject to change without prior notice.

MIDA.Quick 21

Art. 2706

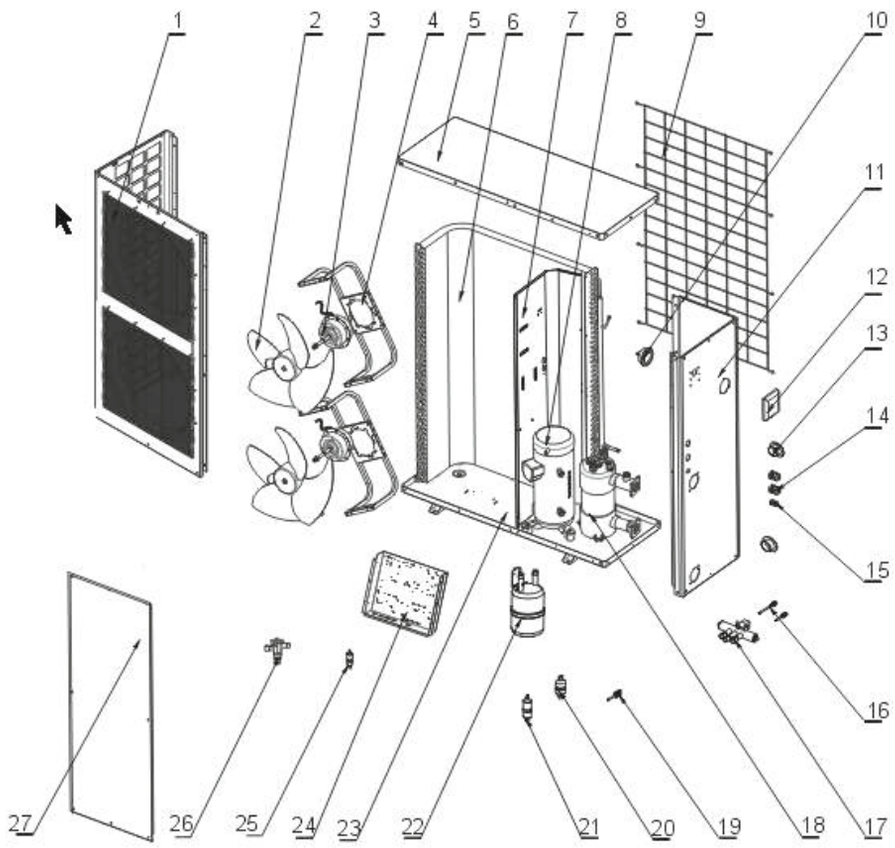

Description	Code	Pos.	Gross Price €
front panel	2701-E1	1	on demand
fan protection	2700-E2	2	on demand
fan	2700-E3	3	on demand
Panel left	2701-E4	4	on demand
Fan motor mount	2708-E5	5	on demand
Finned heat exchanger	2701-E5	6	on demand
cover	2700-E7	7	on demand
fan motor	2700-E8	8	on demand
partition wall	2708-E9	9	on demand
Flow Switch	2670-16	10	on demand
Titanium heat exchangers	2701-E11	11	on demand
Aperture on the right	2701-E12	12	on demand
Display case	2700-E25	13	on demand
manometer	2700-E12	14	on demand
Waterproof cover	2700-E14	15	on demand
Cable gland	2701-E16	16	on demand
valve needle	2700-E18	17	on demand
filter	2708-E18	18	on demand
Low pressure switch	2670-E9	19	on demand
T-piece	2700-E21	20	on demand
4-way valve	3000-E21	21	on demand

Description	Code	Pos.	Gross Price €
electronics cover	2708-E22	22	on demand
LED display	2700-E22	23	on demand
LED display lower part	2700-E22	24	on demand
baseplate	2708-E25	25	on demand
electronics box	2700-E28	26	on demand
compressor	2701-E27	27	on demand
PCB PC1001 2700-E32	2700-E32	28	on demand
Compressor condenser 35µF	3000-E26	29	on demand
Connection terminal (5-fold)	3000-E31	30	on demand
transformer	2800-E39	31	on demand
Connection terminal (2-fold)	3001-E28	32	on demand
Fan capacitor 2µF	3000-E27	33	on demand
not illustrated			
Display extension cable 10m	3000-E32		on demand
display case	3000-E33		on demand
temperature sensor	2670-E42		on demand
Screw connection 1½" x 50 mm	02357		on demand

Technical specifications are subject to change without prior notice.

MIDA.Quick 26

Art. 2707

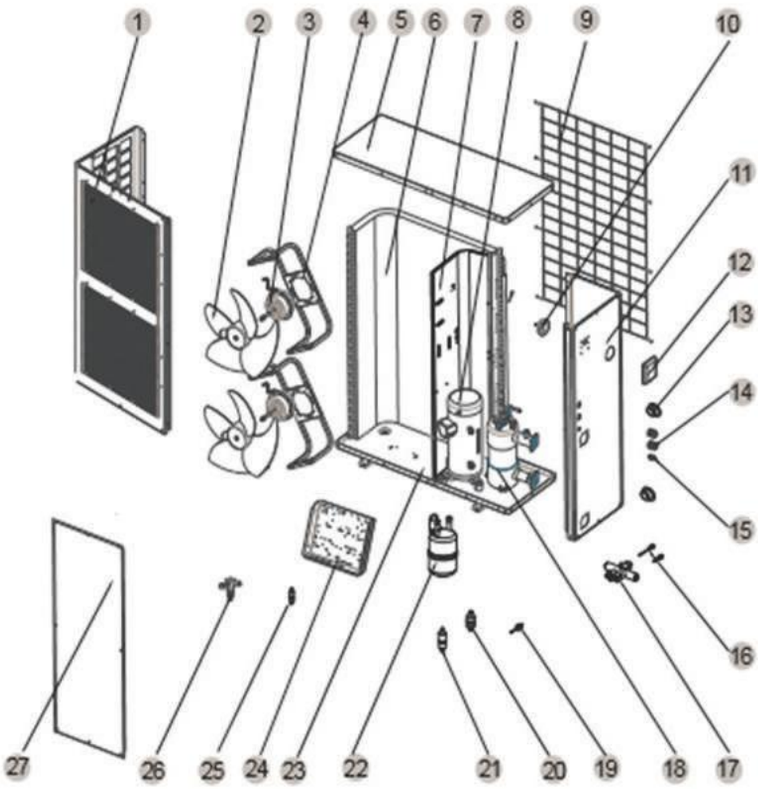

Description	Code	Pos.	Gross Price €
Front panel left	2706-E1	1	on demand
fan	2703-E3	2	on demand
fan motor	2801-E5	3	on demand
Fan motor mount	2706-E4	4	on demand
housing cover	2706-E5	5	on demand
Finned heat exchanger	2706-E6	6	on demand
partition wall	2706-E7	7	on demand
compressor	2707-E8	8	on demand
guard	2706-E9	9	on demand
manometer	2703-E15	10	on demand
Aperture on the right	2707-E11	11	on demand
LED display	2700-E22	12	on demand
pipe connection	2706-E13	13	on demand
Kablverschraubung	2706-E14	14	on demand
Cable gland	2706-E15	15	on demand
needle valve	3000-E22	16	on demand

Technical specifications are subject to change without prior notice.

MIDA.Public 95

Art. 2682

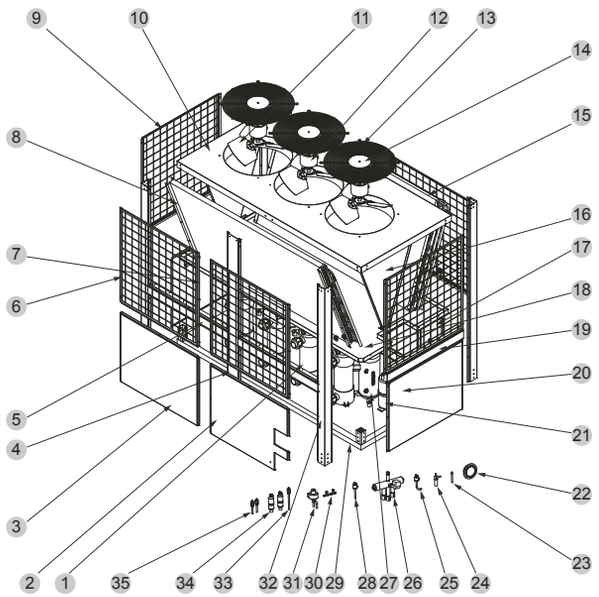

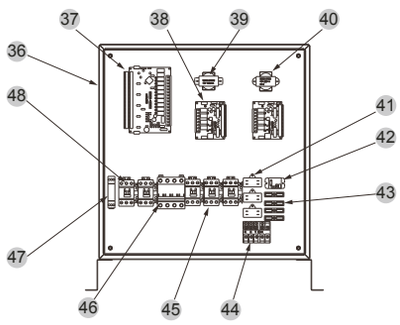

Description	Code	Pos.	Gross Price €
Titanium tube heat exchanger	2682-E1	1	on demand
Left side	2682-E2	2	on demand
Before the back plate	2682-E3	3	on demand
In the column	2682-E4	4	on demand
Fore-and-aft middle beam	2682-E5	5	on demand
Side of the net	2682-E6	6	on demand
Side panel	2682-E7	7	on demand
Finned heat exchanger	2682-E8	8	on demand
Side mesh 2	2682-E9	9	on demand
Top cover plate	2682-E10	10	on demand
Axial flow fan	2682-E11	11	on demand
Axial motor	2682-E12	12	on demand
Fan screen	2682-E13	13	on demand
Protective mesh cover	2682-E14	14	on demand
Finned heat exchanger	2682-E15	15	on demand
Condenser mounting plate	2682-E16	16	on demand
Right side	2682-E17	17	on demand
Water pans	2682-E18	18	on demand
Left right middle beam	2682-E19	19	on demand
Right side of the plate	2682-E20	20	on demand
Gas-liquid separator	2682-E31	21	on demand
Pressure gauge	2682-E22	22	on demand
Get straight through	2682-E23	23	on demand
Unloading valve	2682-E24	24	on demand
Pressure switch	2682-E25	25	on demand
Four-way valve	2682-E26	26	on demand
Compressor	2682-E27	27	on demand
Pressure switch	2682-E28	28	on demand
Chassis	2682-E29	29	on demand
T-piece	2682-E30	30	on demand
Electronic expansion valve	2682-E31	31	on demand
Side pillar	2682-E32	32	on demand
Needle valve	2682-E33	33	on demand
Filter	2682-E34	34	on demand
Needle valve	2682-E35	35	on demand
Electrical box body	2682-E36	36	on demand
PC8001	2682-E37	37	on demand
BHB10	2682-E38	38	on demand
Power transformer	2682-E39	39	on demand
Power transformer	2682-E40	40	on demand
Fan capacitor	2682-E41	41	on demand
Relay	2682-E42	42	on demand
Two position connector	2682-E43	43	on demand
Five position connector	2682-E44	44	on demand
Ac contactor	2682-E45	45	on demand
Air switch	2682-E46	46	on demand
Three-phase ac monitor	2682-E47	47	on demand
Ac contactor	2682-E48	48	on demand

Technical specifications are subject to change without prior notice.

MIDA.Public 145

Art. 2684

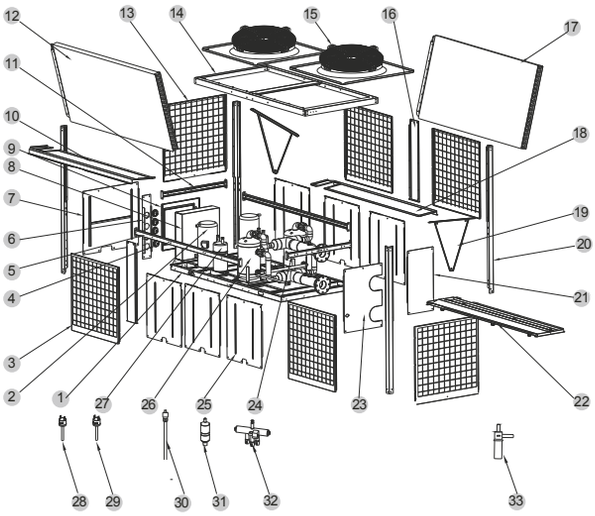

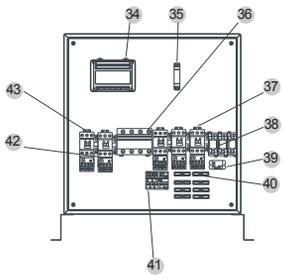

Description	Code	Pos.	Gross Price €
Chassis	2684-E1	1	on demand
Compressor	2684-E2	2	on demand
Protecting Net	2684-E3	3	on demand
Pressure gage	2684-E4	4	on demand
Front Back Middle Beam	2684-E5	5	on demand
Fixation Plate Fixation Plate	2684-E6	6	on demand
Electric Box Side Plate	2684-E7	7	on demand
Electric Box	2684-E8	8	on demand
Electric Box Cover	2684-E9	9	on demand
Right Water Baffle	2684-E10	10	on demand
Left Right Middle Beam	2684-E11	11	on demand
Finned Tube Heat Exchanger	2684-E12	12	on demand
Left Right Protecting Net	2684-E13	13	on demand
Top Cover	2684-E14	14	on demand
Outer Rotor Motor	2684-E15	15	on demand
Middle Upright	2684-E16	16	on demand
Finned Tube Heat Exchanger	2684-E17	17	on demand
Left Water Baffle	2684-E18	18	on demand
Condenser Installation Plate	2684-E19	19	on demand
Upright	2684-E20	20	on demand
Water Outlet Plate one	2684-E31	21	on demand
Water Pan	2684-E22	22	on demand
Water Outlet Plate	2684-E23	23	on demand
Left Right Middle Beam	2684-E24	24	on demand
Middle Panel	2684-E25	25	on demand
Titanium Heat Exchanger	2684-E26	26	on demand
Gas-liquid Separator	2684-E27	27	on demand
Pressure Switch	2684-E28	28	on demand
Pressure Switch	2684-E29	29	on demand
Needle Valve	2684-E30	30	on demand
Filter	2684-E31	31	on demand
Four-way Valve	2684-E32	32	on demand
Electronic Expansion Valve	2684-E33	33	on demand
PC4001 Controller	2684-E34	34	on demand
Three-phase AC Detector	2684-E35	35	on demand
Circuit Breaker	2684-E36	36	on demand
AC Contactor	2684-E37	37	on demand
Middle Relay	2684-E38	38	on demand
Relay	2684-E39	39	on demand
2-Position Wire Holder	2684-E40	40	on demand
5-Position Wire Holder	2684-E41	41	on demand
AC Contactor	2684-E42	42	on demand
AC Contactor	2684-E43	43	on demand

Technical specifications are subject to change without prior notice.

FILTER

MIDA.Carbon Premium GFK Filter

Art. 715, 716

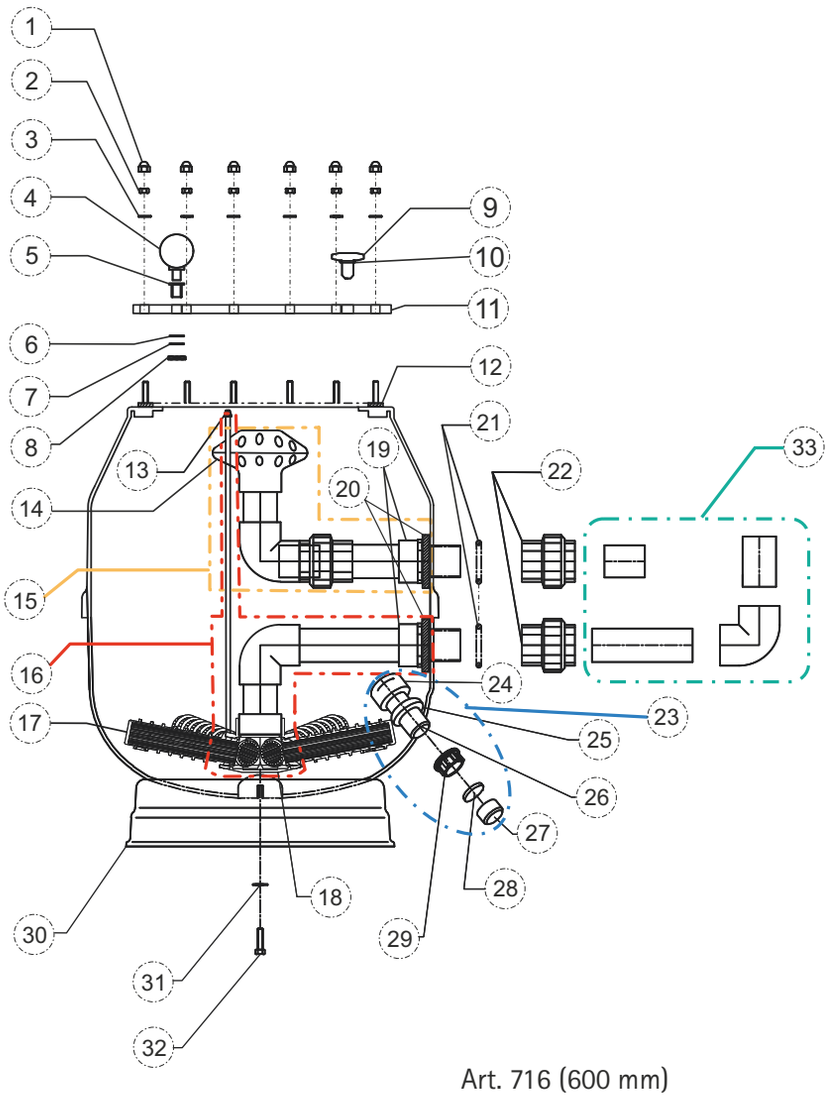

Art. 715 (500 mm)

Description	Code	Pos.	Gross Price €
filter finger	715-E1	17	on demand
Inner set above	715-E2	15	on demand
Inner set below	715-E3	16	on demand
Adapter union D50mm x 1 1/2 "	715-E4	22	on demand
O-ring	715-E4.1	21	on demand
filter foot	715-E5	30	on demand
Lid completely transparent	718-E10	5-11	on demand
Flange gasket for filter cover	718-E12	12	on demand
Screw set for filter cover	718-E13	1-3	on demand
Vent plug with O-ring	718-E14	9+10	on demand
manometer	718-E15	4	on demand
Drain cock completely	718-E16	23	on demand

Art. 716 (600 mm)

Description	Code	Pos.	Gross Price €
filter finger	716-E1	17	on demand
Inner set above	716-E2	15	on demand
Inner set below	716-E3	16	on demand
Adapter union D50mm x 1 1/2 "	716-E4	22	on demand
O-ring	716-E4.1	21	on demand
filter foot	716-E5	30	on demand
Lid completely transparent	718-E10	5-11	on demand
Flange gasket for filter cover	718-E12	12	on demand
Screw set for filter cover	718-E13	1-3	on demand
Vent plug with O-ring	718-E14	9+10	on demand
manometer	718-E15	4	on demand
Drain cock completely	718-E16	23	on demand

Technical specifications are subject to change without prior notice.

MIDA.Carbon GFK Filter

Art. 718, 719, 720, 721

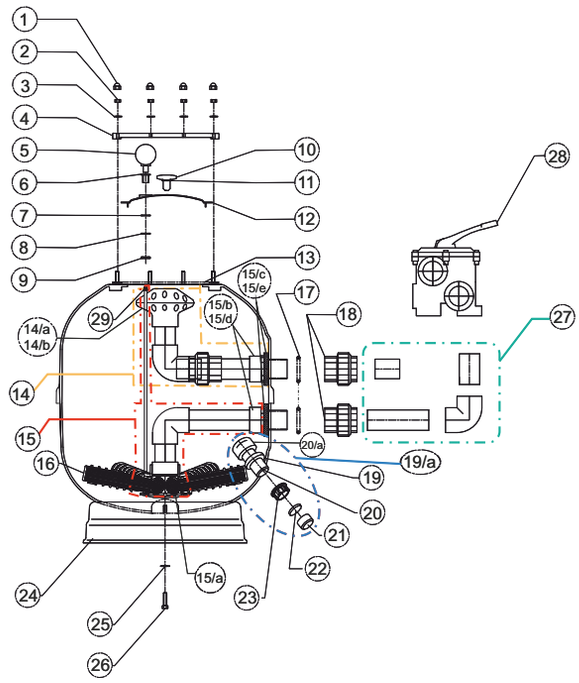

Art. 718 (500 mm)

Description	Code	Pos.	Gross Price €
filter finger	718-E1	16	on demand
Inner set above	718-E2	14	on demand
Inner set below	718-E3	15	on demand
Adapter union D50mm x 1 1/2 "	718-E4	18	on demand
O-ring	718-E4.1	17	on demand
filter foot	718-E5	24	on demand
Lid completely transparent	718-E10	6-12	on demand
Flange for filter cover	718-E11	4	on demand
Flange gasket for filter cover	718-E12	13	on demand
Screw set for filter cover	718-E13	1-3	on demand
Bleed plug with O-ring	718-E14	10+11	on demand
manometer	718-E15	5	on demand
Drain cock completely	718-E16	19a	on demand

Art. 719 (600 mm)

Description	Code	Pos.	Gross Price €
filter finger	719-E1	16	on demand
Inner set above	719-E2	14	on demand
Inner set below	719-E3	15	on demand
Adapter union D50mm x 1 1/2 "	719-E4	18	on demand
O-ring	719-E4.1	17	on demand
filter foot	719-E5	24	on demand
Lid completely transparent	718-E10	6-12	on demand
Flange for filter cover	718-E11	4	on demand
Flange gasket for filter cover	718-E12	13	on demand
Screw set for filter cover	718-E13	1-3	on demand
Bleed plug with O-ring	718-E14	10+11	on demand
manometer	718-E15	5	on demand
Drain cock completely	718-E16	19a	on demand

Art. 720 (750 mm)

Description	Code	Pos.	Gross Price €
filter finger	720-E1	16	on demand
Inner set above	720-E2	14	on demand
Inner set below	720-E3	15	on demand
Adapter union D50mm x 1 1/2 "	720-E4	18	on demand
O-ring	720-E4.1	17	on demand
filter foot	720-E5	24	on demand
Lid completely transparent	718-E10	6-12	on demand
Flange for filter cover	718-E11	4	on demand
Flange gasket for filter cover	718-E12	13	on demand
Screw set for filter cover	718-E13	1-3	on demand
Bleed plug with O-ring	718-E14	10+11	on demand
manometer	718-E15	5	on demand
Drain cock completely	718-E16	19a	on demand

Art. 721 (900 mm)

Description	Code	Pos.	Gross Price €
filter finger	721-E1	16	on demand
Inner set above	721-E2	14	on demand
Inner set below	721-E3	15	on demand
Adapter union D50mm x 1 1/2 "	721-E4	18	on demand
O-ring	721-E4.1	17	on demand
filter foot	721-E5	24	on demand
Lid completely transparent	718-E10	6-12	on demand
Flange for filter cover	718-E11	4	on demand
Flange gasket for filter cover	718-E12	13	on demand
Screw set for filter cover	718-E13	1-3	on demand
Bleed plug with O-ring	718-E14	10+11	on demand
manometer	718-E15	5	on demand
Drain cock completely	718-E16	19a	on demand

Technical specifications are subject to change without prior notice.

MIDA.Split Filter

Art. 751 (400 mm)

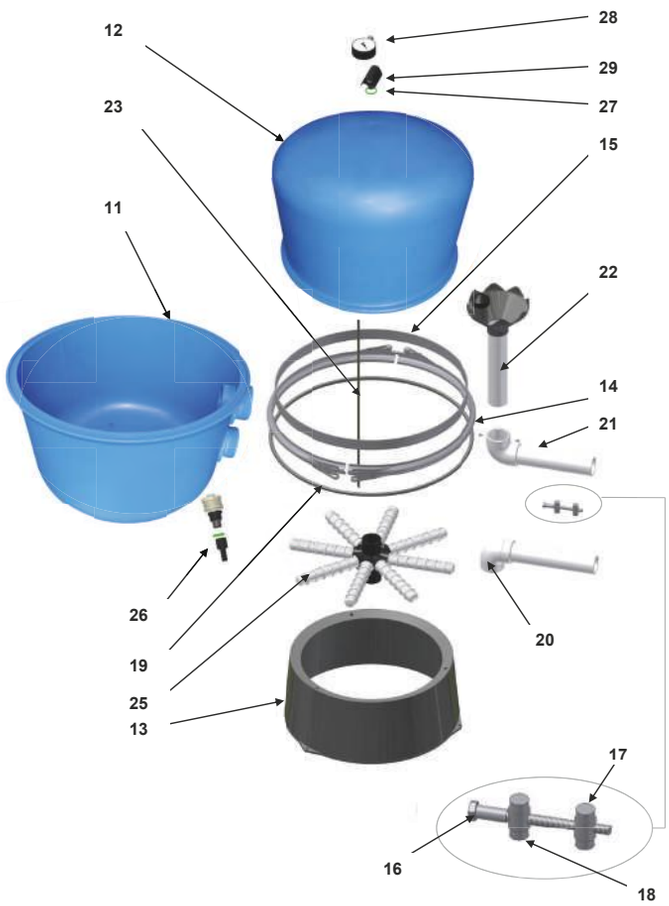

Description	Code	Pos.	Gross Price €
Subshell	751-E1	11	on demand
Front Cover	751-E2	12	on demand
Base including screws and washers	751-E3	13	on demand
Circlip complete	751-E4	14	on demand
inner ring	751-E5	15	on demand
clamping screw	751-E6	16	on demand
Thread roll M8	751-E7	17	on demand
Perforated reel MS	751-E8	18	on demand
seal	751-E9	19	on demand
waste including screws	751-E10	20	on demand
Einlauf-Garnitur incl. Schr.	751-E11	21	on demand
Inlet head cpl.	751-E12	22	on demand
vent pipe	751-E13	23	on demand
Nipple R 1½ "-2¼"	751-E14	24	on demand
Filter cross S	751-E15	25	on demand
Emptying complete	751-E16	26	on demand
Seal ³ / 8 "	751-E17	27	on demand
Manometer ³ / 8 "	751-E18	28	on demand
Venting cpl.	751-E19	29	on demand

Technical specifications are subject to change without prior notice.

MIDA.Split Filter

Art. 753 (500 mm)

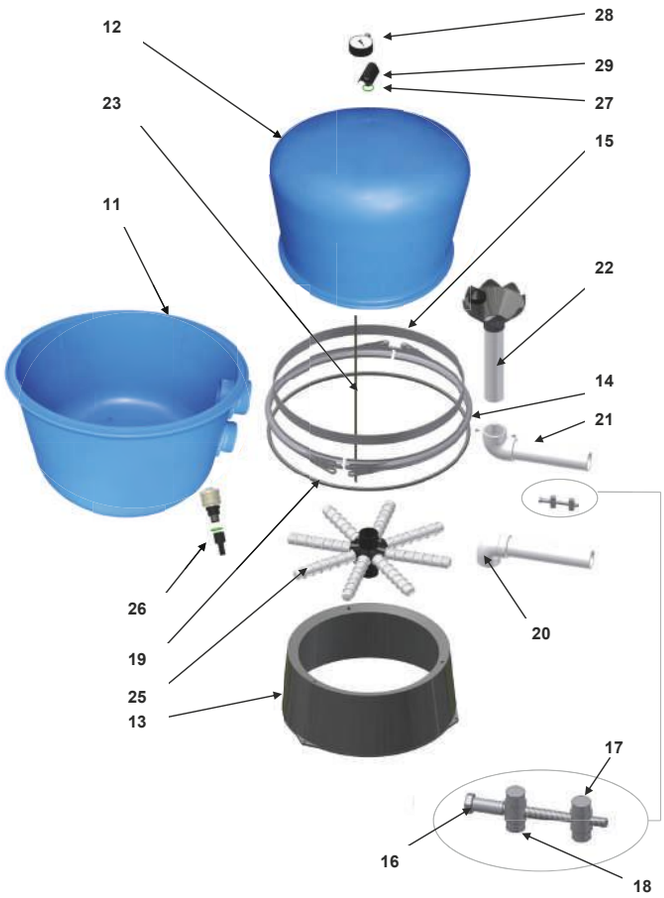

Description	Code	Pos.	Gross Price €
Subshell	753-E1	11	on demand
Front Cover	753-E2	12	on demand
Base including screws and washers	753-E3	13	on demand
Circlip complete	753-E4	14	on demand
inner ring	753-E5	15	on demand
clamping screw	751-E6	16	on demand
Thread roll M8	751-E7	17	on demand
Perforated reel MS	751-E8	18	on demand
seal	753-E9	19	on demand
waste including screws	753-E10	20	on demand
Einlauf-Garnitur incl. Schr.	753-E11	20	on demand
Inlet head cpl.	753-E12	21	on demand
vent pipe	753-E13	21	on demand
Nipple R 1½ "-2¼"	753-E14	22	on demand
Filter cross S	753-E15	23	on demand
Emptying complete	751-E16	24	on demand
Seal ³ / 8 "	751-E17	25	on demand
Manometer ³ / 8 "	751-E18	26	on demand
Venting cpl.	751-E19	27	on demand

Technical specifications are subject to change without prior notice.

JET SWIM UNIT

JET SWIM UNIT

Evolution
Art. 988-F, 988-FE , 988-FB , 988-FEBR

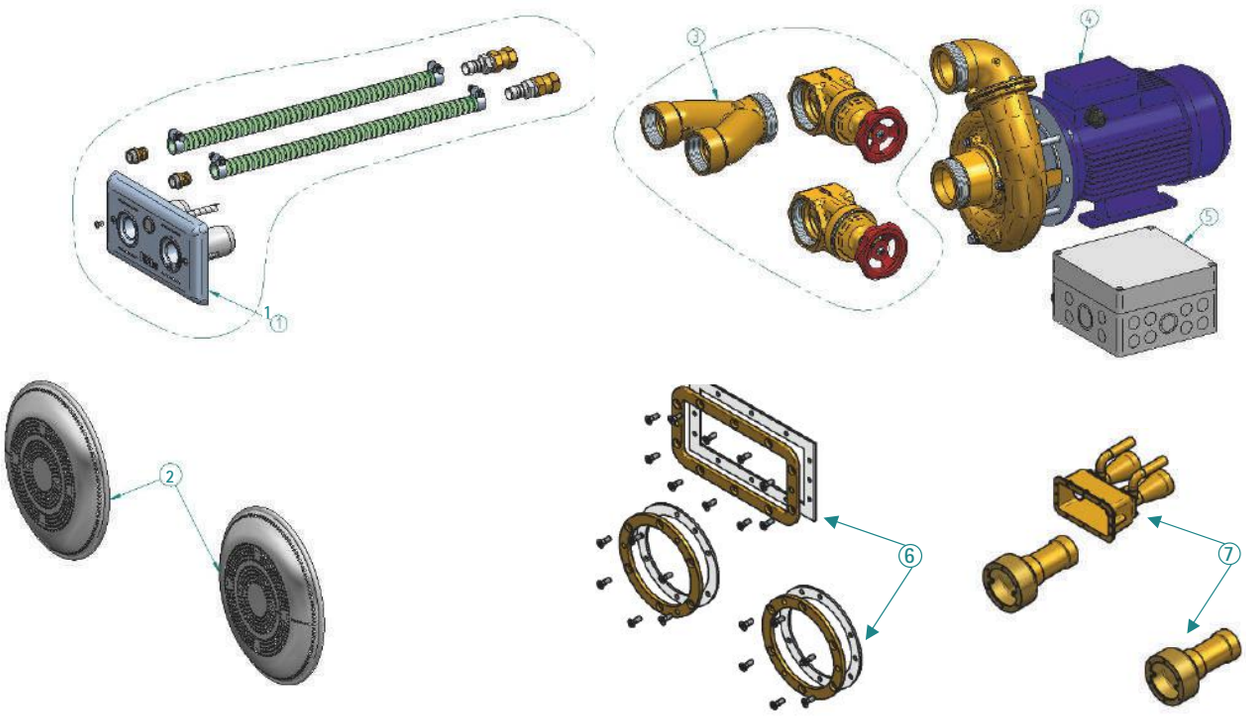

Description	Code	Position	Gross Price €
Fitting GSA Evolution	988-7	1	on demand
Suction strainer Ø280, DN 65	988-6	2	on demand
Connection element GSA Evolution, gunmetal	988-5	3	on demand
Connection element GSA Evolution, bronze	988-5B	3	on demand
Rg pump 2,6kW, gunmetal	7754050	4	on demand
Rg pump 2,6kW, bronze	7754051	4	on demand
Circuit GSA Evolution	986-4	5	on demand
Foil flange, bronze	988-3	6	on demand
Kit, gunmetal	988-2	7	on demand
Kit, bronze	988-2B	7	on demand

Technical specifications are subject to change without prior notice.

HUGO LAHME COUNTER-CURRENT SWIMMING

Taifun Duo
Art. 984-F, 984-G, 984-FB, 984-GB

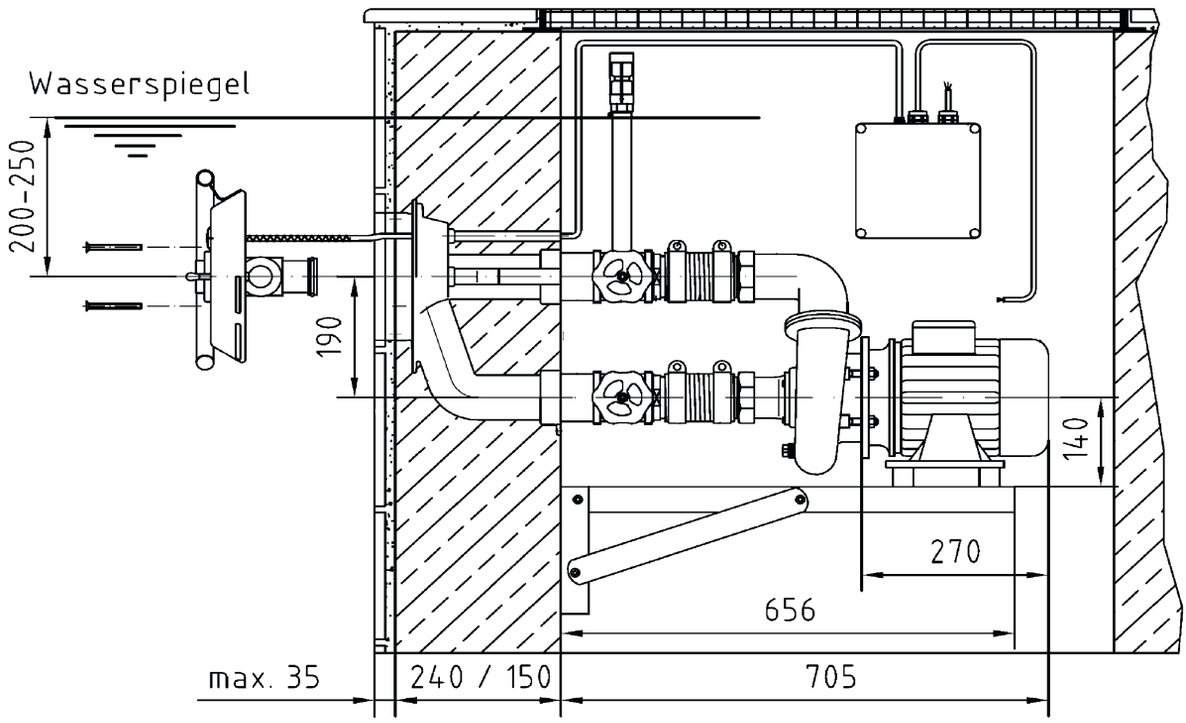

Pump

Description	Code	Gross Price €
Connection set red brass for FitStar typhoon / typhoon duo	984-1	on demand
Connection kit Bronze for FitStar Typhoon / Typhoon Duo	984-1B	on demand
Gunmetal Kit for FitStar Typhoon Duo	984-2	on demand
Kit Bronze for FitStar Typhoon Duo	984-2B	on demand
Transition flange for prefabricated pools Rotguss for FitStar Taifun Duo	984-3	on demand
Transition flange for prefabricated pools Bronze for FitStar Taifun Duo	984-3B	on demand

Technical specifications are subject to change without prior notice.

VACUUM HEADS

FAIRLOCKS VACUUM HEAD Art. 115

Description	Code	Gross Price €
handle	P1	on demand
centre body	P2	on demand
flap	P3	on demand
flap seal	P4	on demand
seal clip	P5	on demand
M6 wing nuzt	P6	on demand
M6 x 50 screw	P7	on demand
weight	P8	on demand
M6 x 50 pan head screw	P9	on demand
M6 x 14 x 1,8 washer	P10	on demand
M6 vibration washer	P11	on demand
M6 full nut	P12	on demand
50 mm wheel	P13	on demand
screw holder	P14	on demand
M6 x 35 bold	P15	on demand
brush spring	P16	on demand
brush, stainless steel	P17	on demand
M5 nut	P18	on demand
locating washer	P19	on demand
half bearing	P20	on demand
30 mm wheel	P21	on demand
M5 x 30 screw	P22	on demand
axle pin	P23	on demand
circle clip	P24	on demand
torsion spring	P25	on demand
adaptor cuff 1½"	P26	on demand

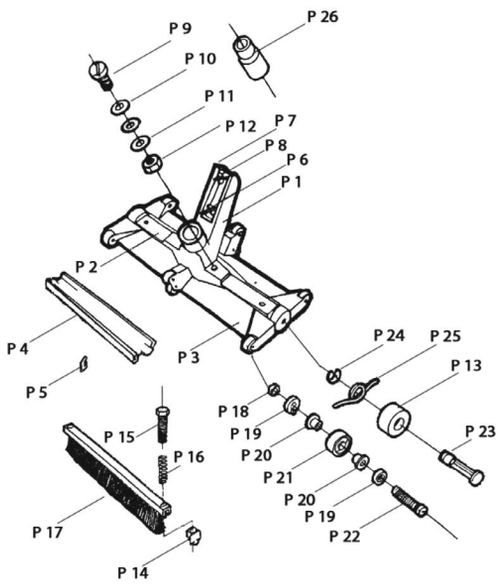

Spare parts	Part. no.	Gross Price €
A-Pack	(2 x P4 + 4 x P5)	on demand
B-Pack	(2 x P9, 4 x P10, 2 x P11, 2 x P12)	on demand
C-Pack	(2 x P13)	on demand
D-Pack	(2 x P14, 2 x P15, 2 x P16, 1 x P17)	on demand
E-Pack	(1 x P18, 2 x P19, 2 x P20, 1 x P21, 2 x P22)	on demand
F-Pack	(3 x P21)	on demand
G-Pack	(2 x P23, 2 x P24, 2 x P25)	on demand

Technical specifications are subject to change without prior notice.

ROTARY DISC VALVE

MIDA.FLO ROTARY DISC VALVE

Art. 301 (2-way), Art. 306 (3-way)

Description	Code	Gross Price €
handle retaining pin	301-E1	on demand
handle	301-E2	on demand
handle spring	301-E3	on demand
valve lid (cover)	301-E4	on demand
valve body / lid o-ring	301-E5	on demand
disc seal retainer screw	301-E8	on demand
disc seal retainer	301-E9	on demand
2-way valve body PVC	301-E11PVC	on demand
2-way valve body ABS	301-E11ABS	on demand
3-way valve body PVC	306-E12PVC	on demand
3-way valve vody ABS	306-E12ABS	on demand
lid bolts	301-E13	on demand
nuts (molded-in)	301-E14	on demand
rotary disc stem with all o-rings	301-E15	on demand
valve top assembly kit	301-E 50 (E1-E10)	on demand

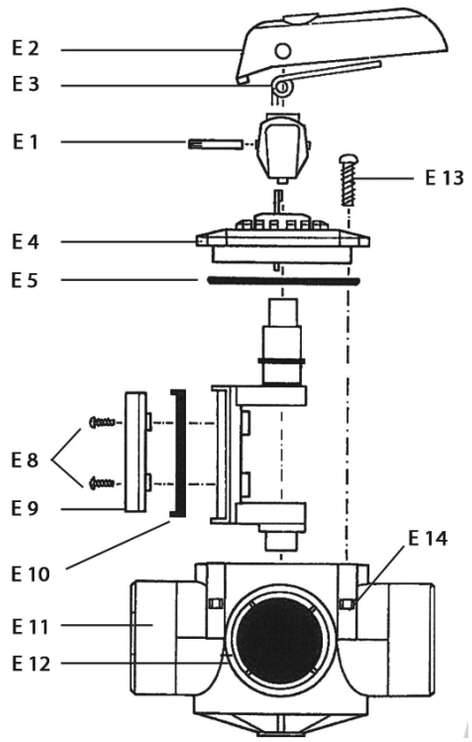

NOTES

- Prices are in EURO.
- Prices are valid from Feb. 1, 2019.
- All prices are net ex warehouse Eichenzell or ex works, incl. packing provided special packing is not necessary.
- Low-volume surcharge of 20,00 € for order below 200,00 €.
- For overseas orders we may charge a flat fee of at least 80,00 € for packing & documentation and 850,00 € for L/C handling & banking.
- Below prices supersede all previous price lists and special offers.
- This price list is based on our Conditions of Sales & Delivery know to you.
- Errors, price and technical changes reserved.
- Shades and dimensions subject to the usual tolerances.
- Product, model, and color changes reserved.
- No warranty is provided for printing errors

WARRANTY INFORMATION

The stated manufacturer's guarantees refer to the replacement of the item without additional costs (such as travel, labor and material expenses).
The statutory warranty remains unaffected.

Business Partners

- We respect our customers, suppliers and other business partners, and work with them through long-term relationships to realize mutual growth based on mutual trust.
- Whenever we seek a new business partner, we are open to any and all candidates, regardless of nationality or size, and evaluate them based on their overall strengths.

MIDAS Pool & Fountain Products GmbH

Am Queracker 4a, 36124 Eichenzell

Telefon: +49 (0) 6659 915 47 - 0

Fax: +49 (0) 6659 915 47 - 10

E-Mail: info@midas-gmbh.de

www.my-midas.de